

MULTICAL® 403

Thermal energy meter

Your benefits

- Ultrasonic technology:
  Long term stable energy measurement with highest accuracy
- Modular design with high flexibility:
  Base device expandable, reduced inventory
- Comprehensive data logger:
  Access to information for analysis and optimization
- One time reprogramming of metrological parameters on site without breaking the MID seal:
  Flexibility and time saving during commissioning
- Option cards for various functions:
  - Cost effective base device
  - Functions can be added later
- Swiss cooling approval (METAS) incl. initial verification:
  Approved for billing purposes

Applications

- Especially suitable for district heating billing applications (main meters, transfer stations, etc.)
- Replacement of mechanical turbine heat meters
- Heating and/or cooling consumption measurement in building services

Properties

- Nominal diameters DN 15 to DN 50
- Nominal flow rates q_p 0,6 to q_p 15
- Any installation position
- Low pressure loss
- Medium temperature 2 to 90 °C (up to 130 °C wall mounting)
- Calculator temperature range 2 to 180 °C
- Mains supply 230 V AC, 24 V AC supply or with 16-year battery (wall mounting) respectively 14 years (compact mounting)
- Integrated real time clock and data logger
- Large LCD display 7 or 8 digits
- Temperature sensors Pt 500
- Storage of last 36 monthly and 20 yearly values
- Type approval / Certification:
  - Heating: CE Conformity according to the European Measuring Instruments Directive (MID)
  - Cooling: Swiss approval (METAS) including initial verification

Options

- Option cards for:
  - M-Bus with 2 water meter inputs
  - M-Bus with 2 pulse outputs energy and volume
  - Wireless OMS T1 868 MHz (battery lifetime 11 years)
  - 2 active analog outputs 0/4 to 20 mA (mains power supply required)
  - BACnet MS/TP RS485 with 2 water meter inputs (mains power supply required)
  - Modbus RTU RS485 with 2 water meter inputs (mains power supply required)
  - BACnet IP with 2 water meter inputs (high-power power supply required)
  - LoRaWAN internal or external antenna

GWF AG
Obergrundstrasse 119
6005 Lucerne, Switzerland

T +41 41 319 50 50
info@gwf.ch, www.gwf.ch

Technical support:
T +41 41 319 52 00, support@gwf.ch

Last updated: 07.07.2026
Generated: 24.11.2026 05:22 | All rights reserved

Technical Data

Series													
Nominal flow rate	**q_p**	**m^3/h**	**0,6**	**0,6**	**1,5**	**1,5**	**2,5**	**3,5**	**6**	**6**	**10**	**10**	**15**
Nominal diameter	**DN**	**mm**	**15**	**20**	**15**	**20**	**20**	**25**	**25**	**25**	**40**	**40**	**50**
Connection thread on meter	G...B	Inch	¾	1	¾	1	1	1¼	1¼	Flange	2	Flange	Flange
Maximum flow rate	q_s	m^3/h	1,2	1,2	3	3	5	7	12	12	20	20	30
Minimum flow rate	q_i	l/h	6	6	15	15	25	35	60	60	100	100	150
Starting value		l/h	3	3	3	3	5	7	12	12	20	20	25
Kvs value		m^3/h	3,46	3,46	4,89	4,89	8,15	13,42	24,5	24,5	40,83	40,83	40,09
Maximum pressure	PN	bar	25										
Standard measuring range	q_p / q_i		100:1										
Protection class			Calculator IP54 Flow sensor IP68										

Pressure loss

The pressure loss in a flow sensor is stated as the maximum pressure loss at q_p.
According to EN 1434, the maximum pressure loss must not exceed 0,25 bar.

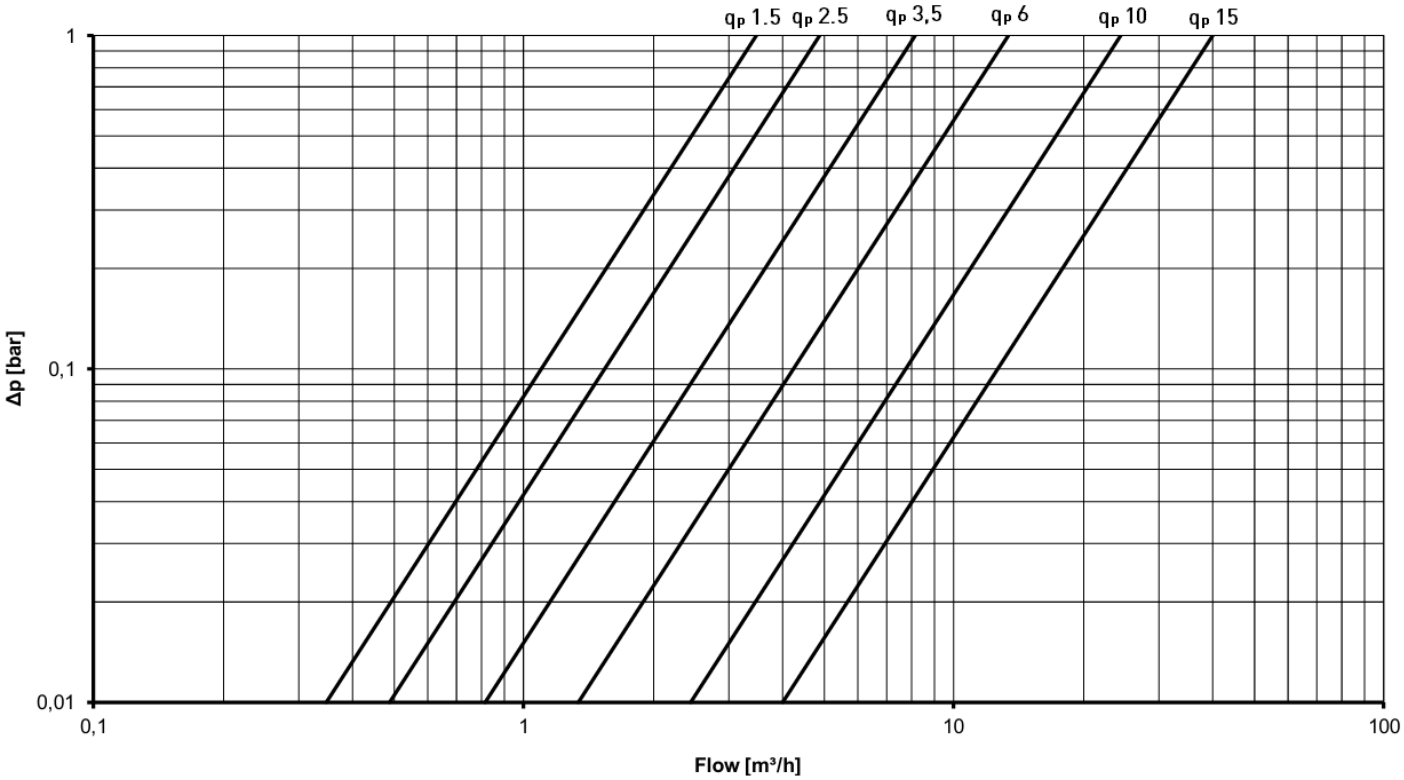

Generated: 24.11.2026 05:22 | All rights reserved

Mechanical design MULTICAL® 403

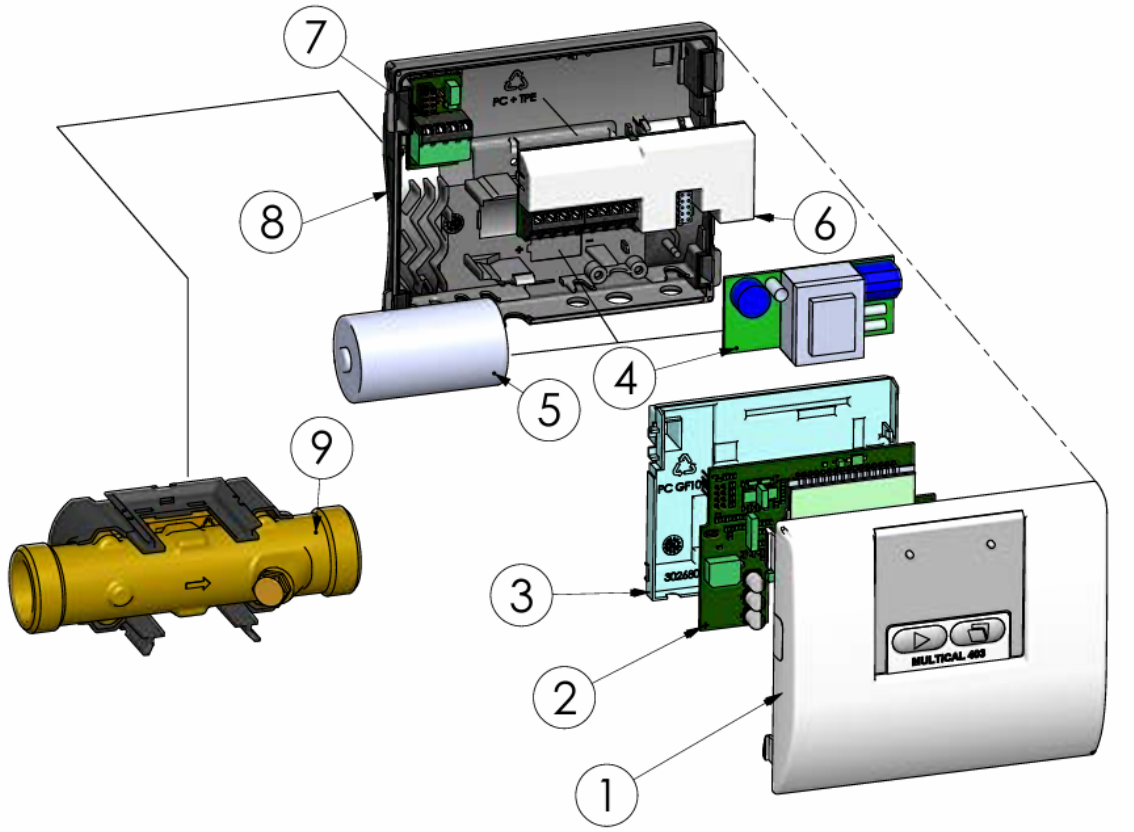

1 Top section with front buttons and laser marking
2 Circuit board with microcontroller, flow ASIC, display, etc.
3 Circuit board cover (may only be opened by an authorized testing laboratory)
4 Either a power supply module can be mounted...
5 ...or a battery can be mounted
6 Data module, e. g., M-Bus
7 Connection for temperature sensors
8 Bottom section
9 Flow sensor (IP68)

Generated: 24.11.2026 05:22 | All rights reserved

Mechanical data

MULTICAL® 403	
Weight (depending on the flow sensor size)	0,9 – 8,6 kg
Ambient temperature	5...55 °C, non-condensing, closed location (indoor installation)
Media temperatures	2...130 °C (Heat, Heat-/Cooling) 2...50 °C (Cooling) (At media temperatures below the ambient temperature or above 90 °C, wall-mounting of the calculator is recommended)
Medium in flow sensor	Water (district heating water as described in CEN TR 16911 and AGFW FW510)
Storage temperature	-25...60 °C (drained flow sensor)
Flow sensor cable	1,5 m (the cable is non-detachable)
Temperature sensor cables	1,5 m, 3 m, 10 m

Materials	
Case, coupling	Hot forged, dezincification-resistant brass (CW 602N)
Case, flange	Stainless steel, W. No. 1.4308
Transducer	Stainless steel, W. No. 1.4404
O-rings	EPDM
Measuring tube	Thermoplastic, PES 30 % GF
Reflektors	Thermoplastic, PES 30 % GF and stainless steel, W. No. 1.4306
Flow sensor cover	Thermoplastic, PC 20 % GF
Wall bracket	Thermoplastic, PC 20 % GF
Calculator Top	Thermoplastic, PC 10 % GF with TPE (thermoplastic elastomer)
Calculator Base	Thermoplastic, PC/ABS
Calculator internal cover	Thermoplast, PC 10 % GF
Cables	Silicone cable with inner Teflon insulation

Generated: 24.11.2026 05:22 | All rights reserved

Approved meter data

MULTICAL® 403	
Heat meter	DK-0200-MI004-037
Cooling meter	TS 27.02 009
Bifunctional heat/cooling meter	DK-0200-MI004-037 und TS 27.02 009
Temperature range	θ: 2 °C...180 °C
Differential range	Δθ: 3 K...178 K
Total Temperature range	The stated minimum temperatures only relate to the type approval. The meter has no cut-off for low temperature and thus measures down to 0,01 °C and 0,01 K.
Standards and norms	EN 1434:2007/AC:2007 EN 1434:2015+A1:2018 EN 1434:2022 BEK1178
EU directives	Measuring Instruments Directive (MID) Low Voltage Directive (LVD) Electromagnetic Compatibility Directive (EMC) Radio Equipment Directive (RED) Restriction of Hazardous Substances Directive (RoHS) Pressurised Equipment Directive (PED)
EN 1434 designation	Environmental class A and C
MID Mechanical environment	Class M1 and M2
MID Electromagnetic environment	Class E1
Temperature sensor	Pt 500 – EN 60751

Generated: 24.11.2026 05:22 | All rights reserved

Accuracy

Meter components	MPE according to EN 1434-1	MULTICAL® 403, typical accuracy
Calculator	Ec = ± (0,5 + ΔΘ min/ΔΘ) %	Ec = ± (0,15 + 2/ΔΘ) %
Flow sensor	Ef = ± (2 + 0,02 q_p/q), but not over ± 5 %	Ef = ± (1 + 0,01 q_p/q) %
Sensor set	Et = ± (0,5 + 3 ΔΘ min/ΔΘ) %	Et = ± (0,4 + 4/ΔΘ) %

Typical total accuracy of MULTICAL® 403 compared to EN 1434-1 qp 1,5

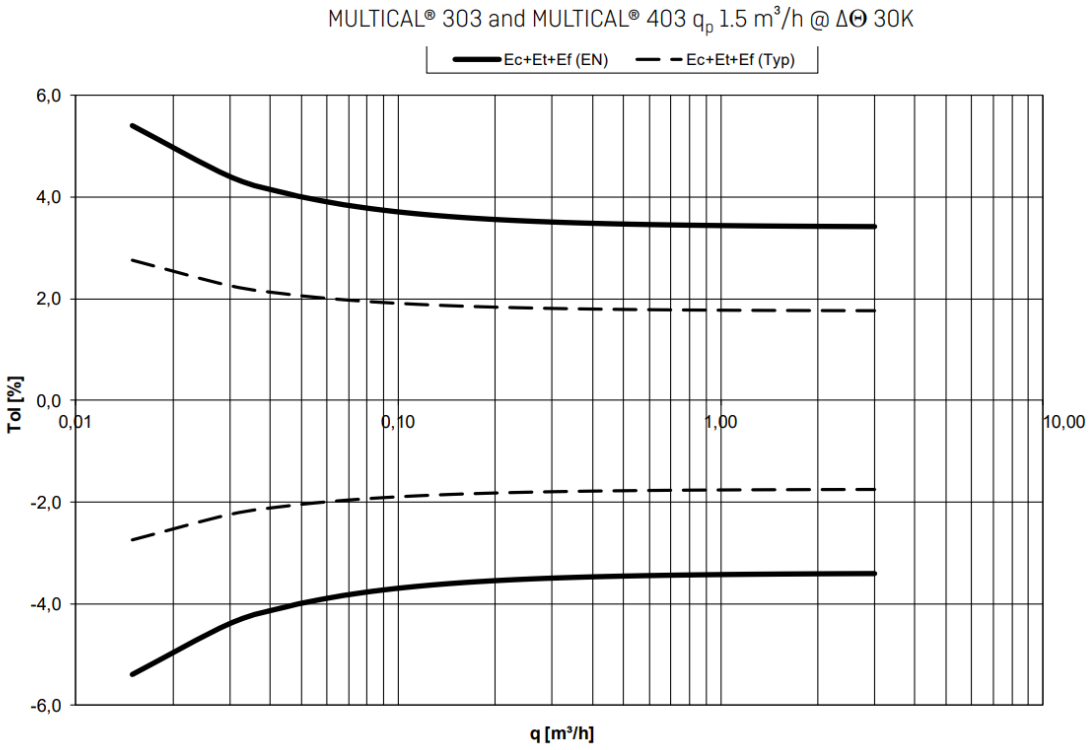

Generated: 24.11.2026 05:22 | All rights reserved

Dimensioned sketches

Calculator and wall mount bracket



Flow sensor with G¾ and G1 thread connection

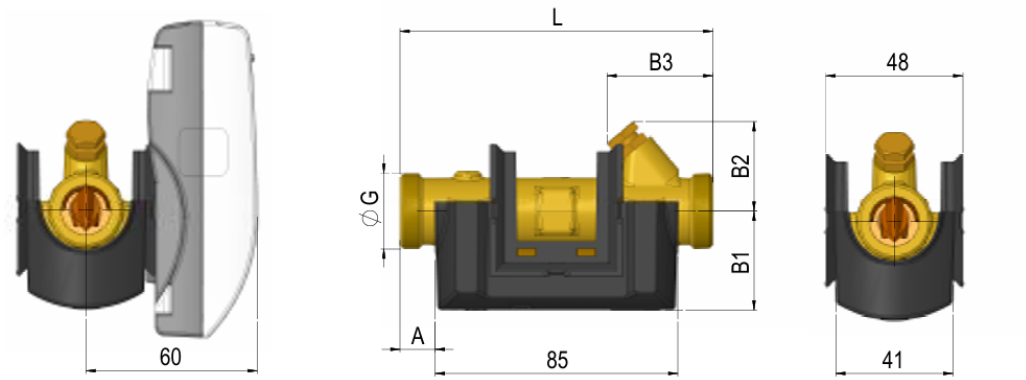

Flow sensor G¾ and G1							
Nominal flow rate	**q_p**	**m^3/h**	**0,6 + 1,5**	**1,5**	**2,5**	**0,6 + 1,5**	**2,5**
Thread	**G**	**Inch**	**G¾B**	**G1B**	**G1B**	**G1B**	**G1B**
Total length	L	mm	110	130	130	190	190
Total height	H	mm	67	70	76	76	76
Total width	W	mm	48	48	48	48	48
Dimension A	A	mm	12	22	22	22	22
Dimension B1	B1	mm	35	38	38	38	38
Dimension B2	B2	mm	32	32	38	38	38
Dimension B3	B3	mm	38	48	48	78	78
Weight		app. kg	0,9	1,0	1,0	1,1	1,2

Generated: 24.11.2026 05:22 | All rights reserved

Flow sensor with G5/4 and G2 threaded connections

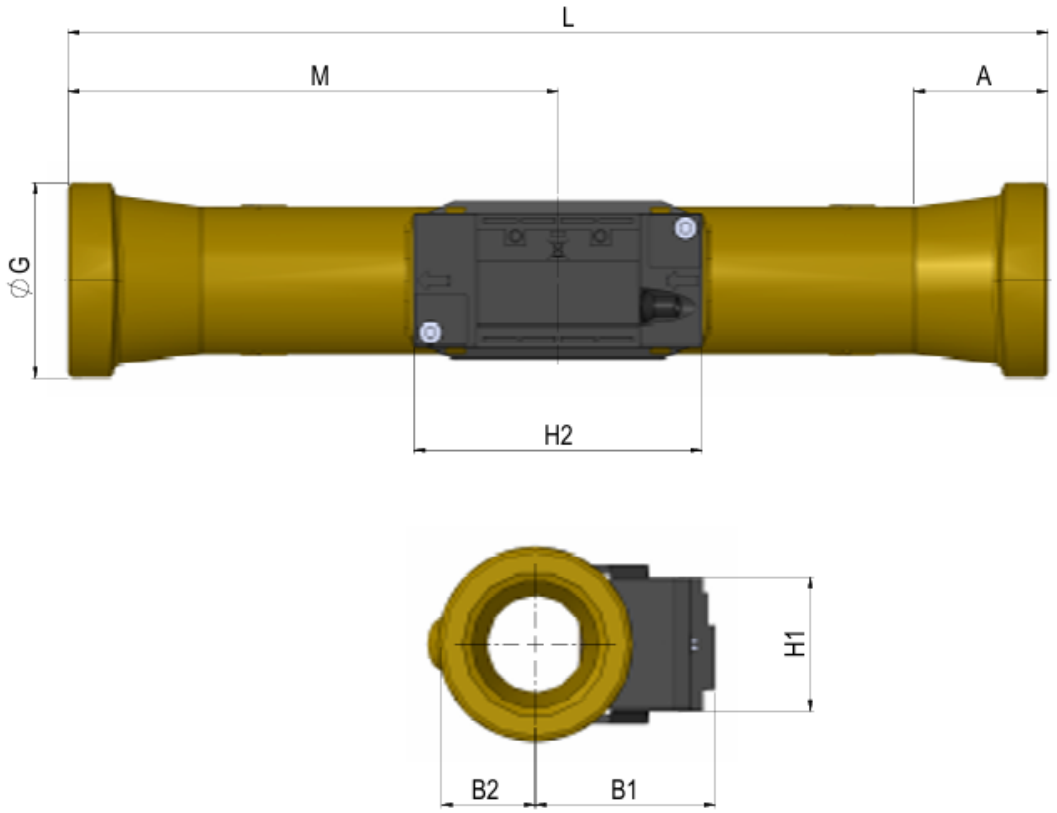

Flow sensor G5/4 and G2					
Nominal flow rate	**q_p**	**m^3/h**	**3,5**	**6**	**10**
Thread	**G**	**Inch**	**G5/4B**	**G5/4B**	**G2B**
Total length	L	mm	260	260	300
Total height	H	mm	71	73	84
Total width	W	mm	42	42	60
Dimension M	M	mm	130	130	130
Dimension H2	H2	mm	88	88	88
Dimension A	A	mm	16	16	40,2
Dimension B1	B1	mm	51	53	55
Dimension B2	B2	mm	20	20	29
Dimension H1	H1	mm	41	41	41
Weight		app. kg	2,0	2,1	3,0

Generated: 24.11.2026 05:22 | All rights reserved

Flow sensor with DN 25, DN 40 and DN 50 flange connection

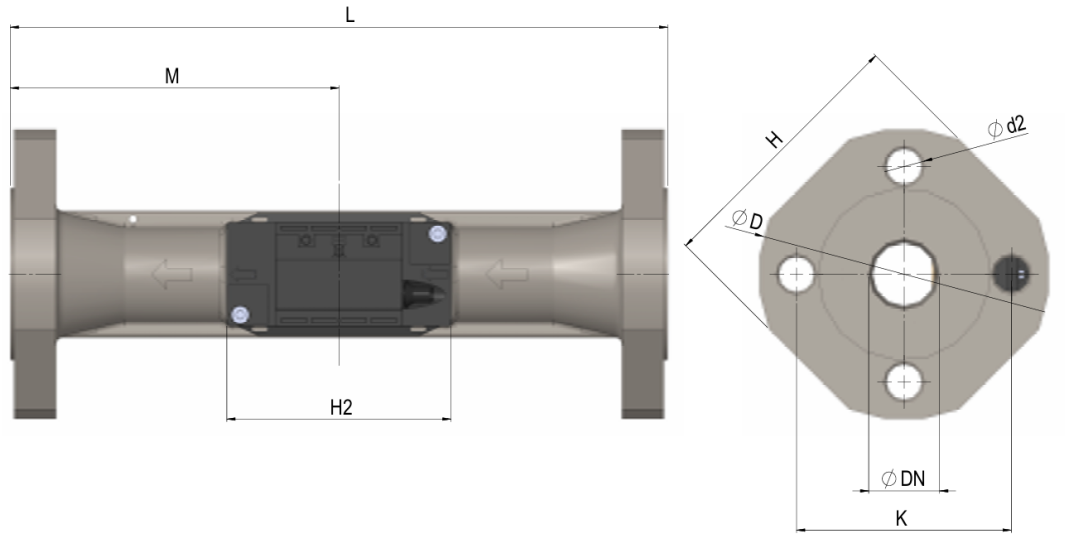

Flow sensor DN 25, DN 40 and DN 50 flange					
Nominal flow rate	**q_p**	**m^3/h**	**6**	**10**	**15**
Nominal diameter	**DN**	**mm**	**25**	**40**	**50**
Total length	L	mm	260	300	270
Total height	H	mm	106	140	145
Dimension M	M	mm	130	150	155
Dimension H2	H2	mm	88	88	88
Dimension D	D	mm	115	150	165
Dimension K	K	mm	85	110	125
Quantity of bolts		Pcs.	4	4	4
Bolt thread			M12	M12	M12
Bolt diameter	d2	mm	14	18	18
Weight		app. kg	4,6	7,5	8,6

Generated: 24.11.2026 05:22 | All rights reserved

Electrical data

MULTICAL® 403	
Display	LCD – 7 or 8 digits with a digit height of 8,2 mm (Standard 7)
Resolutions	9999,999 – 99999,99 – 999999,9 – 9999999 99999,999 – 999999,99 – 9999999,9 – 99999999
Energy units	MWh – kWh – GJ (Standard kWh)
Data logger contents	Programmable - all registers can be selected
Data logging interval	Programmable - from 1 minute to 1 year
Data Logging depth	Programmable - standard: 20 years, 36 months, 460 days, 72 hours
Info logger (EEPROM)	50 info codes (50 latest are shown in the display)
Clock/calendar (with backup battery)	Clock, calendar, leap year compensation, target date
Daylight saving time/wintertime (DST)	Programmable The function can be disabled so that "technical normal time" is used
Clock accuracy	Without external adjustments: Less than 15 minutes/year With external adjustment every 48 hours: Less than 7 s from legal time
Data communication	KMP protocol with CRC16 is used for optical communication and modules
Power in temperature sensors	<10 µW RMS
Supply voltage	3,6 V DC ± 0,1 V DC
Battery type	3,65 V DC 1 x D-cell
Battery life	Up to 16 years @ t_{BAT}<30 °C The battery lifetime is affected by the meter's communication and setup parameters as well as transmission interval, transmission power and datagram contents.
Lithium contents	2 x app. 0,9 g
Backup battery (for real-time clock)	3,0 V DC, BR-Zellen Lithium
Network supply	230 V AC +15/-30 %, 50/60 Hz 24 V AC ±50 %, 50/60 Hz 24 V DC +75/-25 % (24 V DC just for High-Power-SMPS)
Insulation voltage	3,75 kV
Electricity consumption	<1 W
Backup supply	An integrated supercapacitor bridges interruptions caused by short-term network outages (only power supply modules type).

Generated: 24.11.2026 05:22 | All rights reserved

MULTICAL® 403 Pulse in- and outputs

Pulse inputs In-A/In-B	Electronical contact	Reed contact
Pulse input	680 kΩ pull-up for 3,6 V	680 kΩ pull-up for 3,6 V
Pulse ON	<0,4 V for > 30 ms	<0,4 V for > 500 ms
Pulse OFF	> 2,5 V for > 30 ms	> 2,5 V for > 500 ms
Pulse frequency	<3 Hz	<1 Hz
Electrical isolation	No	
Max. cable length	25 m	
Requirements for external contact	Leakage current at function open <1 µA	

Pulse outputs Out-C/Out-D	Opto FET
External voltage	1...48 V DC / V AC
Current	<50 mA
Residual stress	Ron ≤ 40 Ω
Electrical isolation	2 kV
Max. cable length	25 m

Temperature sensor

Temperature sensor	
Sensor element	Pt 500
Version	■ Direct immersion sensor ■ Thermowell measurement
Connection diagram	2-wire connection
Installation length	65 mm / 90 mm / 140 mm
Cable lengths	2 x 1,5 m / 2 x 3 m

Installation note

The MULTICAL® 403 requires neither a straight inlet nor outlet pipe section. The MULTICAL® 403 must not be exposed to pressure below ambient pressure (vacuum).

Installation recommendations

Significant flow disturbances usually occur in connection with partially open valves, pumps and multiple bends. The minimum distances listed below have proven effective for the installation of thermal energy meters (best practice approach):

Minimum recommended distances	
Inlet section	5 x DN
Outlet section	3 x DN

Generated: 24.11.2026 05:22 | All rights reserved