

# MTKcoder® MP compact

Multijet domestic water meter

## Your benefits

- Mechanical roller register with 1-litre-resolution: **Efficient consumption monitoring in smart metering applications**
- Revolutionary Multiprotocol interface: **Investment security due to the interoperability of the meter**
- Transfer of the effective meter reading: **No data loss and guaranteed security of the billing data**
- Batteryless register: **No service life restriction**
- No programming required when commissioning the meter in a readout system (Plug & Play): **Easy and fast on-site installation**
- Standardised interface: **No service life restriction**
- Long service life, robust domestic water meter: **Excellent measuring stability and reliability**
- Measurement of low flow rates: **Increased cost effectiveness**

## Applications

- Automated mobile or fixed network readout of relevant billing data
- Wired or radio remote readout of hard to access metering installations, e.g. meter pits, reservoirs

## Properties

- Multijet impeller wheel, super dry-dial, magnetic coupling
- $Q_3$ 2,5: Measuring range R100
- $Q_3$ 4–25: Measuring range R160
- 8 dial resolution with 3 comma place
- Maximum operation pressure PN 16 bar
- Maximum operating temperature 30 °C
- Horizontal or vertical installation (Vertical riser/down pipe)
- High grade wear resistant and corrosion proof materials
- Inlet strainer
- Reconditionable and recyclable execution
- Materials suited for contact with potable water
- CE Conformity according to European Measuring Instruments (MID)
- Standard register with Multiprotocol interface
- M-Bus standard unit load: 2 unit loads (3 mA)

## Options

- Flood proof MTKcoder® MP register (IP68) with Multiprotocol interface and meter lid / 5 m cable
- NPSM threaded connection (only for horizontal housing)
- Radio module RCM®-H200 compact
  **Documentation: RCM®-H200**
- Radio module RCM®-LRW...
  **Documentation: RCM®-LRW...**

GWF AG
Obergrundstrasse 119
6005 Lucerne, Switzerland

T +41 41 319 50 50
info@gwf.ch, www.gwf.ch

Technical support:
T +41 41 319 52 00, support@gwf.ch

Last updated: 29.04.2026
Generated: 24.11.2026 05:22 | All rights reserved

# Technical Data

| Execution | | | MTKcoder® MP (horizontal) | | | | | | | MTKcoder® MP-VS or -VF (vertical)[1] | | | |
|---|---|---|---|---|---|---|---|---|---|---|---|---|---|
| Nominal diameter | DN | mm | 15 | 20 | 25 | 25 | 32 | 40 | 50 | 20 | 25 | 32 | 40 |
| Connection thread on meter | G...B | Inch | ¾ | 1 | 1¼ | 1¼ | 1½ | 2 | 2⅜ | 1 | 1¼ | 1½ | 2 |
| Connection thread on coupling | R... | Inch | ½ | ¾[2] | 1 | 1 | 1¼ | 1½ | 2 | ¾[2] | 1 | 1¼ | 1½ |
| Operating pressure | PN | bar | 16 | 16 | 16 | 16 | 16 | 16 | 16 | 16 | 16 | 16 | 16 |
| Nominal flow rate | $Q_3$ | $m^3/h$ | 2,5 | 4 | 6,3 | 10 | 10 | 16 | 25 | 4 | 6,3 | 10 | 16 |
| Overload flow rate[3] | $Q_4$ | $m^3/h$ | 3,125 | 5 | 7,875 | 12,5 | 12,5 | 20 | 31,25 | 5 | 7,875 | 12,5 | 20 |
| Transitional flow rate ± 2 % | $Q_2$ | $m^3/h$ | 0,04 | 0,04 | 0,063 | 0,1 | 0,1 | 0,16 | 0,25 | 0,04 | 0,063 | 0,1 | 0,16 |
| Minimum flow rate ± 5 % | $Q_1$ | $m^3/h$ | 0,025 | 0,025 | 0,039 | 0,062 | 0,062 | 0,1 | 0,156 | 0,025 | 0,039 | 0,062 | 0,1 |
| Smallest readable volume | | l | 0,05 | 0,05 | 0,05 | 0,05 | 0,05 | 0,05 | 0,05 | 0,05 | 0,05 | 0,05 | 0,05 |
| Maximum register reading | | $m^3$ | 100'000 | | | | | | | | | | |
| Temperature | | max.°C | 30 | 30 | 30 | 30 | 30 | 30 | 30 | 30 | 30 | 30 | 30 |
| Measuring range | | | R100 | R160 | R160 | R160 | R160 | R160 | R160 | R160 | R160 | R160 | R160 |

1) -VS = Vertical riser / -VF = Vertical down pipe 2) Also supplied with couplings R½ 3) Max. 1 h per 24 h, with max. total time of 100 h

| Dimensions and weights | | | MTKcoder® MP (horizontal) | | | | | | | MTKcoder® MP-VS or -VF (vertical)[1] | | | |
|---|---|---|---|---|---|---|---|---|---|---|---|---|---|
| **Length without couplings** | **A** | **mm** | **165** | **190** | **260** | **260** | **260** | **300** | **300** | **105** | **150** | **150** | **200** |
| Length with couplings | | mm | 239 | 282 | 352 | 352 | 372 | 432 | 452 | 197 | 242 | 262 | 332 |
| Meter height with lid | B | mm | 119 | 115 | 135 | 135 | 135 | 160 | 174 | - | - | - | - |
| Meter height with inductive interface | B1 | mm | 131 | 127 | 147 | 147 | 147 | 172 | 186 | - | - | - | - |
| Meter height with radio module RCM®-H200 compact | B2 | mm | 156 | 152 | 172 | 172 | 172 | 197 | 211 | - | - | - | - |
| Meter height with lid from pipe centre line | C | mm | 84 | 85 | 91 | 91 | 91 | 114 | 117 | - | - | - | - |
| Meter height with inductive interface from pipe centre line | C1 | mm | 96 | 97 | 103 | 103 | 103 | 126 | 129 | - | - | - | - |
| Meter height with radio module RCM®-H200 compact from pipe centre line | C2 | mm | 121 | 122 | 128 | 128 | 128 | 151 | 154 | - | - | - | - |
| Meter depth with lid / inductive interface | D | mm | - | - | - | - | - | - | - | 148 | 169 | 183 | 226 |
| Meter depth with radio module RCM®-H200 compact | D1 | mm | - | - | - | - | - | - | - | 150 | 169 | 183 | 226 |
| Meter depth with lid / inductive interface from pipe centre line | E | mm | - | - | - | - | - | - | - | 130 | 143 | 156 | 190 |
| Meter depth with radio module RCM®-H200 compact from pipe centre line | E1 | mm | - | - | - | - | - | - | - | 132 | 143 | 156 | 190 |
| Installation depth with lid from pipe centre line | W | mm | 48 | 48 | 50 | 50 | 50 | 68 | 76 | 48 | 49 | 51 | 70 |


Generated: 24.11.2026 05:22 | All rights reserved

| Dimensions and weights | | | MTKcoder® MP (horizontal) | | | | | | | MTKcoder® MP-VS or -VF (vertical)[1] | | | |
|---|---|---|---|---|---|---|---|---|---|---|---|---|---|
| Installation depth with radio module RCM®-H200 compact from pipe centre line[4] | W1 | mm | 64 | 64 | 64 | 64 | 64 | 68 | 76 | 64 | 64 | 64 | 70 |
| Installation depth IP68 or with inductive interface from pipe centre line[4] | W2 | mm | 57 | 57 | 57 | 57 | 57 | 68 | 76 | 57 | 57 | 57 | 70 |
| Meter height with open lid | G | mm | 167 | 163 | 183 | 183 | 183 | 208 | 222 | - | - | - | - |
| Weight w/o couplings | | app. kg | 1,7 | 2,1 | 2,6 | 2,6 | 2,7 | 5,4 | 6,7 | - | - | - | - |
| Weight w/o couplings MTK-VS | | app. kg | - | - | - | - | - | - | - | 1,9 | 3,0 | 3,0 | 6,0 |
| Weight w/o couplings MTK-VF | | app. kg | - | - | - | - | - | - | - | 2,0 | 3,4 | 3,7 | 7,3 |
| Weight with couplings | | app. kg | 1,9 | 2,3 | 3,0 | 3,0 | 3,3 | 6,4 | 8,7 | - | - | - | - |
| Weight with couplings MTK-VS | | app. kg | - | - | - | - | - | - | - | 2,1 | 3,4 | 3,6 | 7,0 |
| Weight with couplings MTK-VF | | app. kg | - | - | - | - | - | - | - | 2,2 | 3,8 | 4,3 | 8,3 |

4) By turning the register / assembly installation depth W can be realised 5) only in NPSM execution

| Certifications | MTKcoder® MP (horizontal) | | | | | | | MTKcoder® MP-VS or -VF (vertical)[1] | | | |
|---|---|---|---|---|---|---|---|---|---|---|---|
| SVGW certification | x | x | x | x | x | x | x | x | x | x | x |
| UBA Brass (DIN 50930-6) | x | x | x | x | x | x | x | x | x | x | x |
| KTW / W270 | x | x | x | x | x | x | x | x | x | x | x |
| NSF-61-G & 372 | - | - | x[5] | - | - | x[5] | - | - | - | - | - |

| Information | |
|---|---|
| EU-REACH Art. 33 / ChemV Art. 71 | Brass products contain lead > 0,1 % |


Generated: 24.11.2026 05:22 | All rights reserved

## Measuring error curve

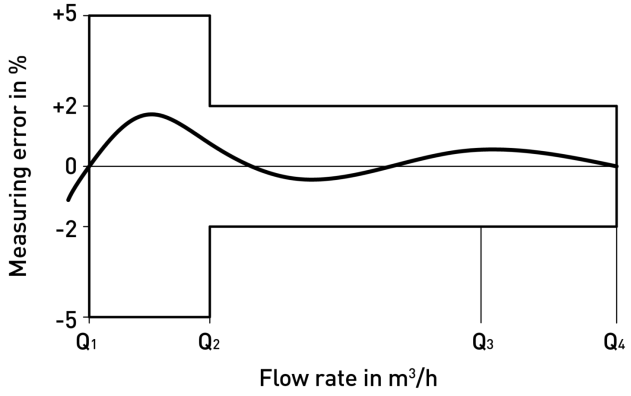


## Typical Head Loss Curve

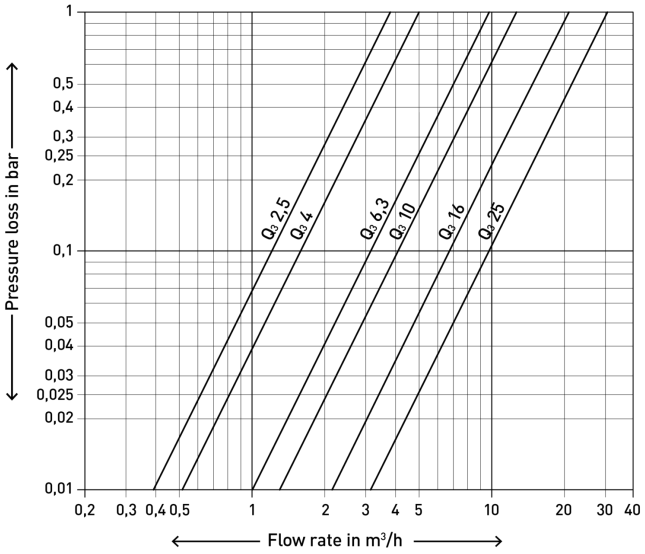


## Materials

| | |
|---|---|
| Housing | UBA Brass (DIN 50930-6) |
| Sealing plate | UBA Brass (DIN 50930-6) |
| Impeller / measuring insert | High grade synthetic materials |
| Bearings | Hard metal, Sapphire, Chrome nickel steel |
| Seal material | EPDM |


Generated: 24.11.2026 05:22 | All rights reserved

## Dimension Diagram

MTKcoder® MP
with meter lid

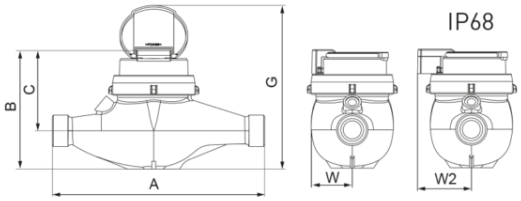


MTKcoder® MP
with inductive interface

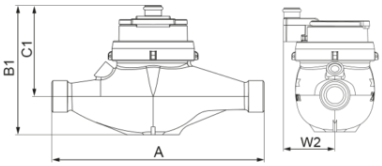


MTKcoder® MP
with radio module RCM®-H200 compact

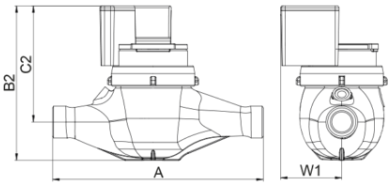


MTKcoder® MP
with meter lid

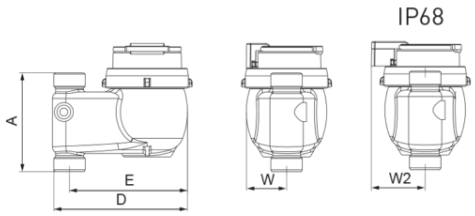


MTKcoder® MP
with inductive interface

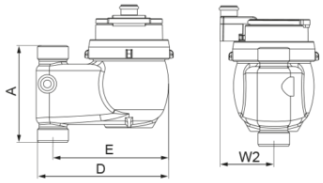


MTKcoder® MP
with radio module RCM®-H200 compact

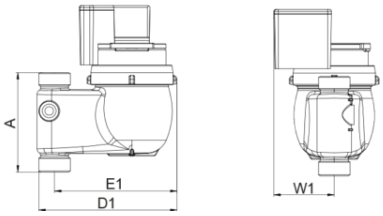


**Register options**

- without cable
- with 1,5 m cable
- Floodproof IP68 with 5 m cable

## Installation

| | | |
|---|---|---|
| **Pipeline:** | horizontal | — |
| | vertical | \| |
| **Meter head:** | upwards | ↑ |

## Installation Requirements

The meter must be installed so that the type plate is always horizontally positioned, facing upwards (do not tilt)

**Documentation: GWF water meters - BAdfei10207**



Generated: 24.11.2026 05:22 | All rights reserved

# GWFcoder®-Technology

### The 2nd generation – even more flexible

The well-established GWFcoder®-system reads the absolute mechanical register value precisely and reliably and provides the data through standardized interfaces. The number wheels with three various long, asymmetrically arranged slots are being scanned through light pipes which are connected to five light emitting diodes (LED). Thus, the exact position of each number wheel can be detected and the encoded absolute register read can be transmitted as part of the protocol by the GWFcoder®-interface. This GWF patented functional principle is being used in millions of installations worldwide since more than 15 years. The GWFcoder®-interface guarantees absolute correlation between the electronic readout and the register reading and provides an incomparably higher level of information compared to meters with pulse output. Meters with GWFcoder®-technology do not contain a battery which, in turn, does not compromise existing revision cycles. The readout device supplies the power for the readout.

GWF enhanced the reliable Smart Metering technology in its 2nd generation, so that 8 instead of 5 number wheels are being scanned and therefore a resolution of 1 liter is possible. Moreover, all products with multiprotocol functionality provide the flexibility to switch between SCR(IEC) and M-Bus which leads to an easy and fast «Plug & Play» installation on site.

In combination with the GWF radio module RCM®-H200 the third interface can be used for wireless M-Bus.

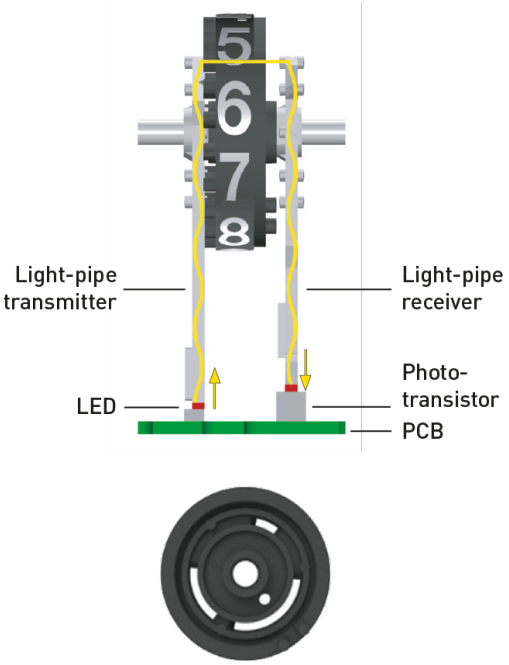


# GWFcoder®-Data package

| SCR: IEC 62056-21 Mode A (IEC 1107) | |
|---|---|
| Medium: | Water |
| Absolute meter reading: | 12365,678 $m^3$ |
| Serial number: | 13215678 |
| Meter size: | DN 20 |
| M-Bus: | EN 13757 |
| ECO: | EN 13757-3 |

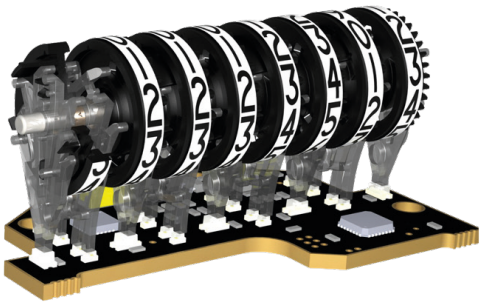


Generated: 24.11.2026 05:22 | All rights reserved

# Example of use

### Wireless readout

Meter with GWFcoder® register is read out by radio using a mobile infrastructure.

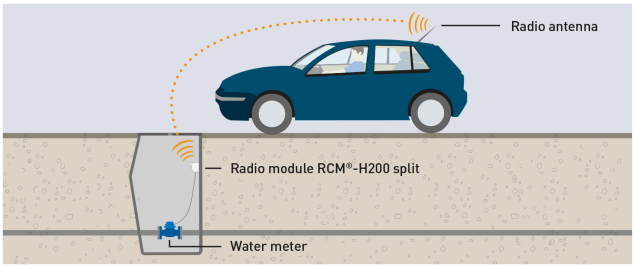



Generated: 24.11.2026 05:22 | All rights reserved