

US ECHO II (Phasing out)

Ultrasonic volume measuring meter

Your benefits

- Robust, high grade wear resistant materials:
  Excellent measuring stability and reliability
- Universal applicable with diverse calculators:
  Meets various requirements also with regard to interfaces
- Integrated intelligence (status and warning messages):
  Simple and quick on-site troubleshooting

Applications

- As a replacement for mechanical impeller heat meters
- Metering of heat and/or cooling consumption in building management

Properties

- Nominal diameters from DN 15 up to DN 50
- Nominal flow rates from q_p 0,6 up to q_p 15
- Lower pressure loss
- No moving parts
- Maximum operating pressure PN 16 bar (Threaded) / PN 25 bar (Flanged)
- Temperature up to 130 °C
- CE Conformity according to European Measuring Instruments Directive (MID)
- Pulser with 3 m cable
  (Standard pulse value: DN 15-32: 2,5 liters, DN 40-50: 10 liters)
- Environmental class C, Accuracy class 2

Options

- Pulser with 5 m or 9 m cable

GWF AG
Obergrundstrasse 119
6005 Lucerne, Switzerland

T +41 41 319 50 50
info@gwf.ch, www.gwf.ch

Technical support:
T +41 41 319 52 00, support@gwf.ch

Last updated: 28.09.2026
Generated: 24.11.2026 12:39 | All rights reserved

Technical Data

Execution			US ECHO II																				
Nominal diameter	DN	mm	15	15	20	20	20	20	20	20	20	20	20	25	25	25	25	25	25	32	40	40	40	50
Operating pressure	PN	bar	16	16	16	16	-	16	16	-	16	16	-	16	16	-	16	16	-	16	16	16	-	-
Operating pressure (flanged)	PN	bar	-	-	-	-	25	-	-	25	-	-	25	-	-	25	-	-	25	-	-	-	25	25
Connection thread on meter	G...B	Inch	¾	¾	1	1	-	1	1	-	1	1	-	1¼	1¼	-	1¼	1¼	-	1½	2	2	-	-
Connection thread on coupling	R...	Inch	½	½	¾	¾	-	¾	¾	-	¾	¾	-	1	1	-	1	1	-	1¼	1½	1½	-	-
Nominal flow rate	q_p	m^3/h	0,6	1,5	0,6	0,6	0,6	1,5	1,5	1,5	2,5	2,5	2,5	3,5	3,5	3,5	6	6	6	6	10	10	10	15
Maximum flow rate	q_s	m^3/h	1,2	3	1,2	1,2	1,2	3	3	3	5	5	5	7	7	7	12	12	12	12	20	20	20	30
Minimum flow rate	q_i	l/h	6	15	6	6	6	15	15	15	25	25	25	35	35	35	60	60	60	60	100	100	100	150
Starting flow		app. l/h	1,2	3	1,2	1,2	1,2	3	3	3	5	5	5	7	7	7	12	12	12	12	20	20	20	30
Kvs-value		m^3/h	3,2	3,2	3,2	3,2	3,2	3,2	3,2	3,2	6	6	6	10,4	10,4	10,4	16,4	16,4	16,4	16,4	33,2	33,2	33,2	33,2
Temperature range		°C	5...130	5...130	5...130	5...130	5...130	5...130	5...130	5...130	5...130	5...130	5...130	5...130	5...130	5...130	5...130	5...130	5...130	5...130	5...130	5...130	5...130	5...130
Measuring range	q_i/q_p		1:100	1:100	1:100	1:100	1:100	1:100	1:100	1:100	1:100	1:100	1:100	1:100	1:100	1:100	1:100	1:100	1:100	1:100	1:100	1:100	1:100	1:100

Dimensions and weights			US ECHO II																				
Length without couplings	L	mm	110	110	130	190	-	130	190	-	130	190	-	150	260	-	150	260	-	260	200	300	-	-
Height	H	mm	72	72	72	72	72	72	72	72	72	72	72	77	77	77	77	77	77	77	85	85	85	85
Height	h	mm	18	18	18	18	-	18	18	-	18	18	-	23	23	-	23	23	-	23	35	35	-	-
Length with flanges	L	mm	-	-	-	-	190	-	-	190	-	-	190	-	-	260	-	-	260	-	-	-	300	270
Height with flanges	h	mm	-	-	-	-	52,5	-	-	52,5	-	-	52,5	-	-	57,5	-	-	57,5	-	-	-	82,5	82,5
Flange external dimension	D	mm	-	-	-	-	105	-	-	105	-	-	105	-	-	115	-	-	115	-	-	-	165	165
Hole circle diameter	L	mm	-	-	-	-	75	-	-	75	-	-	75	-	-	85	-	-	85	-	-	-	125	125
Number of screws		Pcs.	-	-	-	-	4	-	-	4	-	-	4	-	-	4	-	-	4	-	-	-	4	4
Weight		app. kg	1,1	1,1	1,2	1,5	3,2	1,2	1,5	3,2	1,1	1,4	3,2	1,5	1,9	3,6	2,4	2	3,7	1,8	2,5	5,5	7	6,5

Dimension Diagram

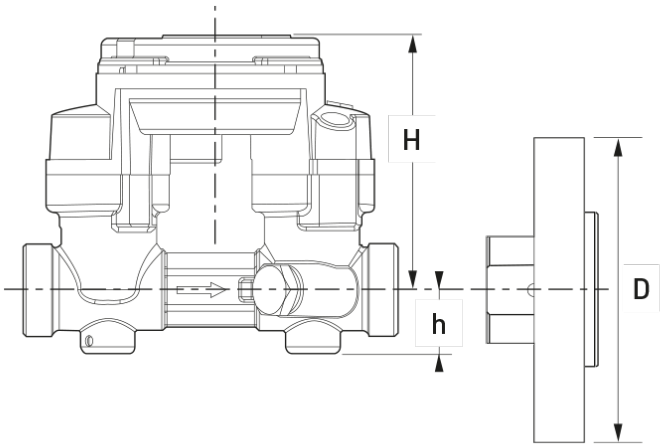

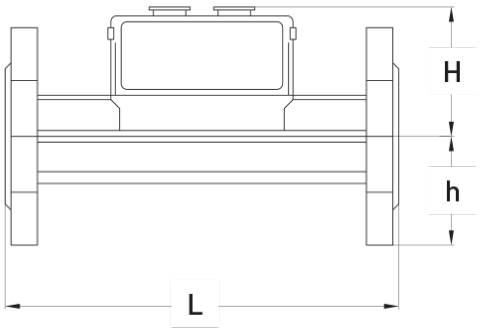

Generated: 24.11.2026 12:39 | All rights reserved

Typical Head Loss Curve

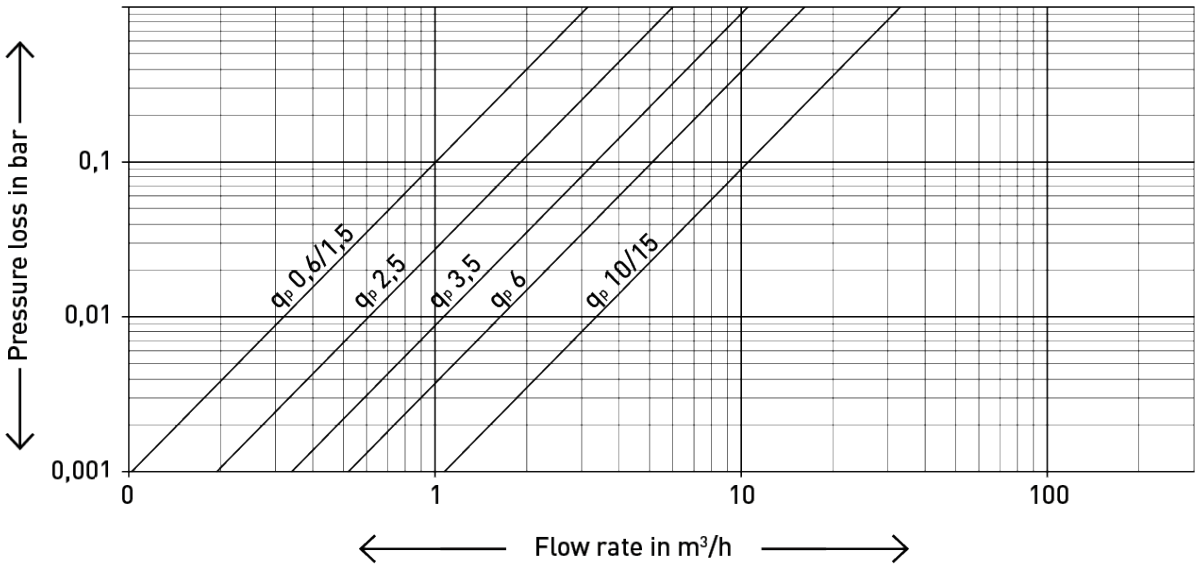

Materials

Body up to DN 20: Brass
Body from DN 25: Bronze

Installation

Pipeline:	horizontal	
	vertical	
Meter head:	sideways	
	± 45°	

Installation - Recommendation

With the US ECHO II, the electronic housing must be mounted on the side (when installed horizontally). US ECHO II may be turned up to max. ± 45° in relation to the pipe axis. A straight inlet or outlet section is not required for US ECHO II ultrasonic volume measuring meters. However, an inlet section of at least 5 x DN is recommendable if sufficient space is available.

Installation recommendations
The choice of installation site must ensure air cannot collect in the meter.

Generated: 24.11.2026 12:39 | All rights reserved

Technical Data Pulse generator

Switching element		
Type		Passive Open collector
Switching voltage	U_{max}	30 V DC
Switching current	I_{max}	27 mA
Switching capacity	P_{max}	0,81 W
Pulse length		5 ms

Pulse value table

Pulse generator	DN 15...32 1 Pulse = ... Liters	DN 40/50 1 Pulse = ... Liters
Pulse	2,5	10

Installation – Recommendations

Pulse transmission interference

In case of interference during the pulse transmission between the pulse generator and the pulse receiver, (i. e. cable is in the same duct as power cable), we recommend shielded and twisted cables.

Generated: 24.11.2026 12:39 | All rights reserved