

CF-51

Calculator

Your benefits

- Big display:
  Easy to read
- Universal applicable:
  - Wall-mounted model (Volume measuring meter UNICO® and MTW)
  - Different power supply possibilities
- Option cards for diverse functionalities:
  - Economical basic device
  - Additional functionalities feasible

Applications

- Metering of heat and/or cooling consumption in building management
- Calculator for local or remote reading

Properties

- Electronic calculator
- LCD-resolution 7 digits
- Non-volatile memory EEPROM
- Temperature measuring range 0 - 180 °C
- Temperature sensor Pt 100 (2-wires)
- Standard EN 1434
- 24 month register
- Supply via 12-year battery, mains or M-Bus (pay attention to versions)
- Maximum values with time stamp
- Combinable with following volume measuring meters:
  - Mechanical impeller meters with Reed-pulser
  - MID
- CE Conformity according European Measuring Instruments Directive (MID)

Options

- Special version for combined heat/cold measurements (special programming)
- Option cards for:
  - M-Bus / 2 water meter inputs
  - M-Bus / 2 pulse outputs
  - M-Bus Power / 2 water meter inputs
  - LonWorks, FTT-10A / 2 water meter inputs (separate supply 24 V AC/DC necessary)
  - Modbus RTU (RS485) / 2 water meters inputs (Power supply module 230 V AC necessary)

GWF AG
Obergrundstrasse 119
6005 Lucerne, Switzerland

T +41 41 319 50 50
info@gwf.ch, www.gwf.ch

Technical support:
T +41 41 319 52 00, support@gwf.ch

Last updated: 01.09.2026
Generated: 23.11.2026 23:43 | All rights reserved

Dimension Diagram

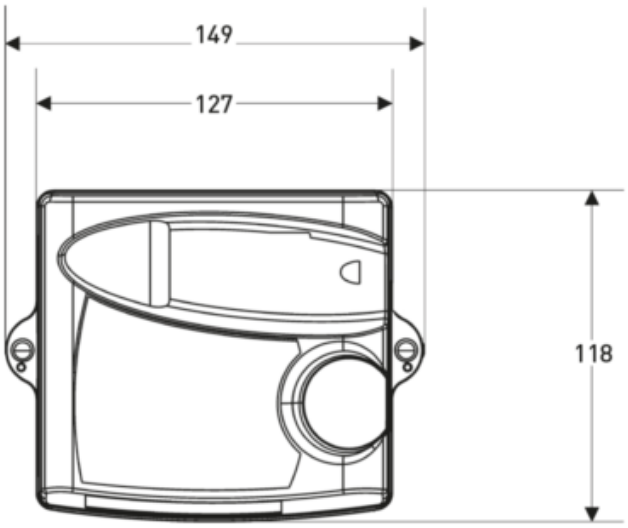

Technical Data

Technical Data CF-51	
Temperature measuring range	0 to 180 °C
Temperature difference	3 to 160 K
Temperature resolution on display	0,1 °C
LCD resolution	7 digits
Max. display resolution	9'999,999 / 99'999,99 / 999'999,9 / 9'999'999
Indication device energy	MWh
Indication device volume	m^3
Indication device flow	m^3/h
Indication device power	kW
Protection class	IP64 acc. DIN 40050
Environment class	C acc. EN 1434
Environment temperature	+5 to + 55 °C (intern installation)
Storage temperature	-10 bis + 60 °C
EMV	Protected acc. DIN EN 50081-1/2, DIN EN 50082-1/2
Double insulation	Protection class II acc. CEI 60364-4-443

Power supply	
Lithium battery	2 x 3,6 V-AA (lifetime up to 12 years)
Mains supply	230 V +10 %/-15 %, 50 Hz +/-2 %, max. 1 VA
Supply via M-Bus (option card)	at M-Bus EN 13757-3 max. 2 M-Bus standard loads (2 x 1,5 mA)

Generated: 23.11.2026 23:43 | All rights reserved

Maximum values	
Parameter	Power, flow and inlet temperature (monthly maximum value on display with time stamp)
Period for averaging	15 min
Internal memory	24 month maximum values

Inputs from volume measuring meter	
Signal	Reed contact, Open collector, Open drain or static contactor
Pulse frequency	max. 16 Hz
Resistore R_{on}/R_{off}	≤150 Ω / ≥ 2 MΩ
Cable diameter	3,75 +/-0,75 mm
Wire cross-section	0,2...1,5 mm^2

Option card M-Bus / 2 water meter inputs	
M-Bus standard load	1 standard load = 1,5 mA power consumption
Protocol	M-Bus according EN 13757-3
Standard transmission rate	2400 baud
Pulse input	Characteristics according EN 1434-2 - 7.1.5 class IC
Pulser	Reed contact, Open collector, Open drain or static contactor
Frequency	max. 5 Hz
Pulse length	min. 100 ms
Resistore R_{on}	max. 10 kΩ
Max. cable length	10 m
Pulse value	1 - 250 l/imp. (programmable, standard 10 l)

Option card M-Bus / 2 pulse outputs	
Heat energy	Output: Heat energy + volume
Heat and cooling energy	Output: Heat and cooling energy
M-Bus standard load	1 standard load = 1,5 mA power consumption
Protocol	M-Bus according EN 13757-3
Standard transmission rate	2400 baud
Pulse output	Characteristics according EN 1434-2 - 7.1.3 class OA
Pulser	galvanically separated optocoupler, bi-polar output
Output frequency	max. 2 Hz
Pulse length	250 ms +/- 8 %
Resistore R_{on}	max. 20 Ω
Pulse value	According to the smallest digit on the display

Generated: 23.11.2026 23:43 | All rights reserved

Option card M-Bus Power / 2 water meter inputs	
M-Bus standard load	2 standard loads = 3 mA power consumption
Protocol	M-Bus according EN 13757-3
Standard transmission rate	2400 Baud
Pulse input	Characteristics according EN 1434-2 - 7.1.5 class IC
Pulser	Reed contact, Open collector, Open drain or static contactor
Frequency	max. 5 Hz
Pulse length	min. 100 ms
Resistore R_{on}	max. 10 kΩ
Max. cable length	10 m
Pulse value	1 - 250 l/imp. (programmable, standard 10 l)

Option card LonWorks / 2 water meter inputs	
Protocol	LonTalk®
Power supply	24 V AC/DC
Power input	1 VA
Pulse input	Characteristics according EN 1434-2 - 7.1.5. Klasse IC
Pulser	Reed contact, Open collector, Open drain or static contactor
Frequency	max. 5 Hz
Pulse length	min. 100 ms
Resistore R_{on}	max. 10 kΩ
Max. cable length	10 m
Pulse value	1 - 250 l/imp. (programmable, standard 10 l)

Temperature sensor	
Temperature sensor	Pt 100 (2-wires)

Generated: 23.11.2026 23:43 | All rights reserved