

MTW VoMe

Multijet flow meter

Your benefits

- Robust, high grade wear resistant materials: **Excellent measuring stability and reliability**
- Measurement of low flow rates: **Increased cost effectiveness**

Applications

- The multijet warm water meter is suited for central heating installations and industrial measurement applications
- For flow rates up to 15 m^3/h

Properties

- Multijet impeller wheel, super dry-dial with magnetic coupling
- Register can be turned for best readout position
- Maximum operating pressure PN 16
- Maximum operating temperature 90 °C
- Horizontal or vertical (MTW-V...) installation
- Reed pulser IPG14 with 1,5 m cable
- High grade wear resistant and corrosion proof materials
- Inlet strainer
- Reconditionable and recyclable execution
- Magnetic protective cover against external influences
- CE Conformity according to European Measuring Instruments Directive (MID)
- Environmental class B, Accuracy class 3

Options

- Reed pulser IPG14 with 3 m or 5 m cable
- Different pulse values

Documentation: IPG14

GWF AG
Obergrundstrasse 119
6005 Lucerne, Switzerland

T +41 41 319 50 50
info@gwf.ch, www.gwf.ch

Technical support:
T +41 41 319 52 00, support@gwf.ch

Last updated: 23.04.2026
Generated: 25.11.2026 13:11 | All rights reserved

Technical Data

Execution			MTW (horizontal)							MTW-VS or -VF (vertical)[1]			
Nominal diameter	**DN**	**mm**	**15**	**20**	**25**	**25**	**32**	**40**	**50**	**20**	**25**	**32**	**40**
Operating pressure	**PN**	**bar**	**16**	**16**	**16**	**16**	**16**	**16**	**16**	**16**	**16**	**16**	**16**
Connection thread on meter	G...B	Inch	¾	1	1¼	1¼	1½	2	2⅜	1	1¼	1½	2
Connection thread on coupling	R...	Inch	½	¾	1	1	1¼	1½	2	¾	1	1¼	1½
Nominal flow rate	**q_p**	**m^3/h**	**1,5**	**2,5**	**3,5**	**6**	**6**	**10**	**15**	**2,5**	**3,5**	**6**	**10**
Maximum flow rate	q_s	m^3/h	3	5	7	12	12	20	30	5	7	12	20
Minimum flow rate ± 5 %	q_i	l/h	30	50	70	120	120	200	300	50	70	120	200
Kvs-value		m^3/h	3,5	5	10	12	12	20	30	5	10	12	20
Temperature range		°C	2...90	2...90	2...90	2...90	2...90	2...90	2...90	2...90	2...90	2...90	2...90
Measuring range	q_i/q_p		1:50	1:50	1:50	1:50	1:50	1:50	1:50	1:50	1:50	1:50	1:50

Dimensions and weights			MTW (horizontal)							MTW-VS or -VF (vertical)[1]			
Length without couplings	**A**	**mm**	**165**	**220[2]**	**260**	**260**	**260**	**300**	**300**	**105**	**150**	**150**	**200**
Length with couplings		mm	239	312	352	352	372	432	452	197	242	262	332
Total height	B	mm	121	127	137	137	137	163	177	-	-	-	-
Meter height from pipe centre line	C	mm	78	87	94	94	94	117	120	-	-	-	-
Meter depth	D	mm	-	-	-	-	-	-	-	148	169	183	226
Meter depth from pipe centre line	E	mm	-	-	-	-	-	-	-	130	143	156	190
Meter width	F	mm	95	95	100	100	100	135	151	95	98	101	139
Weight w/o couplings		app. kg	1,8	2,1	2,7	2,7	2,8	5,2	5,8	-	-	-	-
Weight w/o couplings MTW-VS		app. kg	-	-	-	-	-	-	-	2,0	2,3	2,3	5,7
Weight w/o couplings MTW-VF		app. kg	-	-	-	-	-	-	-	2,1	3,5	3,7	7,0
Weight with couplings		app. kg	2,1	2,4	3,2	3,2	3,5	6,3	7,4	-	-	-	-
Weight with couplings MTW-VS		app. kg	-	-	-	-	-	-	-	2,3	2,8	3,0	6,8
Weight with couplings MTW-VF		app. kg	-	-	-	-	-	-	-	2,4	4,0	4,4	8,1

1] -VS = vertical riser / -VF = vertical down pipe 2] Also supplied in length 190 mm

Generated: 25.11.2026 13:11 | All rights reserved

Dimension Diagram

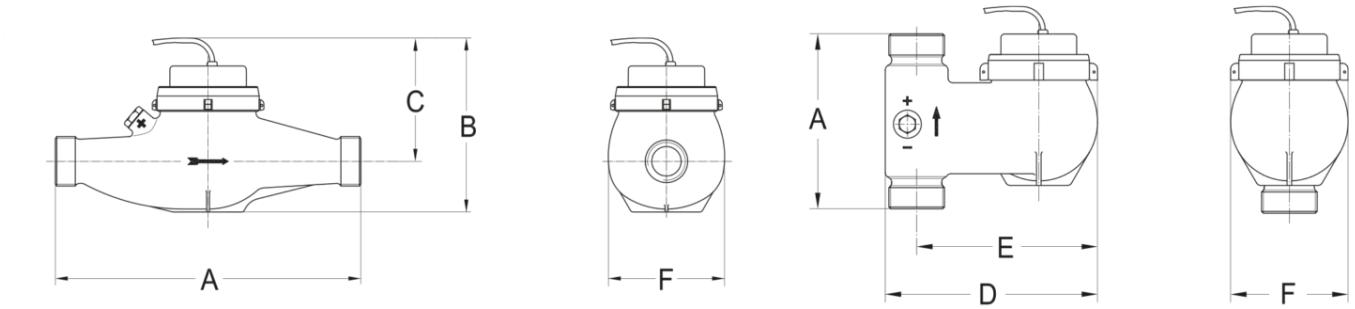

Materials

Housing:	UBA Brass (DIN 50930-6)
Sealing plate:	UBA Brass (DIN 50930-6)
Impeller / head piece:	High grade synthetic material
Bearings:	Hard metal, sapphire, Chrome nickel steel
Seal material:	EPDM

Typical Head Loss Curve

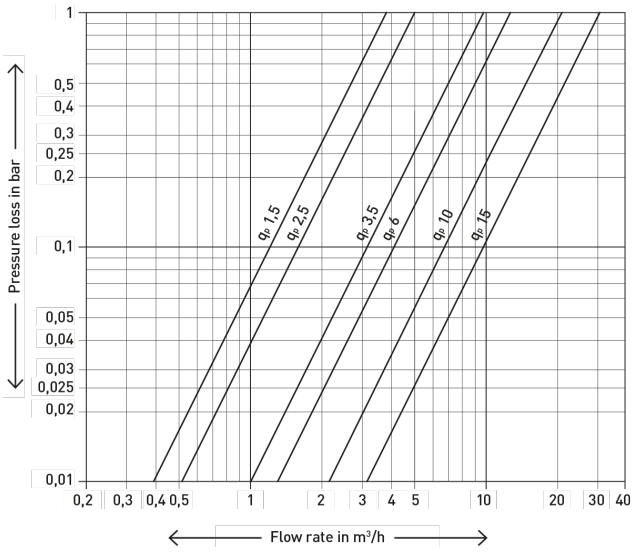

Installation

Pipeline: horizontal

vertical

Meter head: upwards

Pulse value table

Pulse values	q_p 1,5–6	1[1)]	2,5	10	25	100	250
(1 Pulse = ...Liter)	q_p 10–15	–	2,5	10	25	100	250

1) Only available in measuring range 1:25

Generated: 25.11.2026 13:11 | All rights reserved