

TDF-27 & THF-45/50/105/140/230

Temperature sensor Pt 100

Your benefits

- High precision:
  Lower measuring error
- Short response time:
  Exact actual values
- Different types:
  Flexible use

Applications

- Metering of heat and/or cooling consumption in building management
- Metering of heat and/or cooling consumption in district heating supply

Properties

- Direct immersion sensors or pocket sensors
- Temperature sensor Pt 100
- Head sensor with silicon cable
- Paired delivery
- Standard EN 1434
- CE Conformity according to European Measuring Instruments Directive (MID)

GWF AG
Obergrundstrasse 119
6005 Lucerne, Switzerland

T +41 41 319 50 50
info@gwf.ch, www.gwf.ch

Technical support:
T +41 41 319 52 00, support@gwf.ch

Last updated: 07.09.2026
Generated: 25.11.2026 06:20 | All rights reserved

Technical Data

	Direct immersion sensor TDF-27 (old TDF-50)	Pocket sensor THF-45	Pocket sensor THF-50	Head sensor THF-105/140/230
Measuring resistor	Pt 100	Pt 100	Pt 100	Pt 100
Resistor acc. to	EN 60751 / EN 1434	EN 60751 / EN 1434	EN 60751 / EN 1434	EN 60751 / EN 1434
Connection diagram	2-wires	2-wires	2-wires	2- or 4-wires
Temperature measuring range (approved measuring range)	0 to 150 °C	0 to 150 °C	0 to 150 °C	0 to 150 °C
Measuring tolerance	Class B	Class B	Class B	Class B
Temperature difference	3 to 150 K	3 to 150 K	3 to 150 K	3 to 150 K
Response time T0,5	2 s	2 s (mounted in pocket: 15 s)	2 s (mounted in pocket: 15 s)	⩽6 s (mounted in pocket: ⩽12 s)
Ambient temperature	0 to + 70 °C	0 to + 70 °C	0 to + 70 °C	0 to + 70 °C
Sensor diameter	3,6/5,4 mm	5,2 mm	6 mm	6 mm
Sensor length	27,5 mm (immersion depth)	45 mm	50 mm	105/140/230 mm
Connection thread	M10 x 1	-	-	-
Cable type	Silicon	PVC	Silicon	Silicon
Wire cross-section	2 x 0,34 mm^2	2 x 0,22 mm^2	2 x 0,34 mm^2	2 x 0,75 mm^2
Cable length	1,75 m	1,6 m	1,75 m	3 m
Tightness	IP65	IP65	IP65	IP65
Pressure	PN 25	PN 25	PN 25	PN 25

	Flow sensor adapter	Pockets	Single pockets	Single pockets
Connection thread	G½ (M10 x 1) / G⅜	G½	G½ (M10 x 1) / G⅜	G½B
Installation length	-	50/85 mm	33/75 mm	85/120/210 mm
Material	Brass	Steel (St. 35)	Brass	Steel (St. 35)

Generated: 25.11.2026 06:20 | All rights reserved

Dimensions Diagram

Direct immersion sensor TDF-27

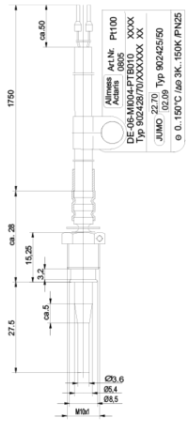

Pocket sensor THF-45

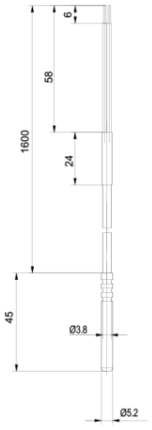

Pocket sensor THF-50

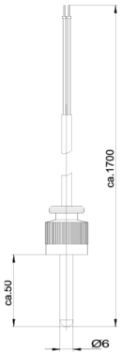

Head sensor THF-105/140/230

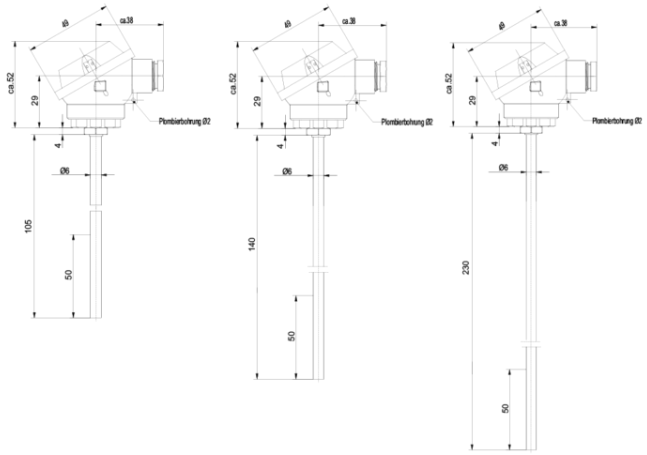

Flow sensor adapter VFA

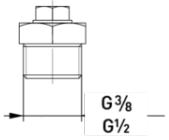

Pocket G⅜ x 33

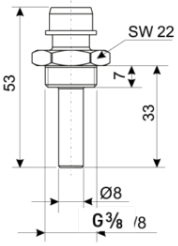

Pocket G½ x 33

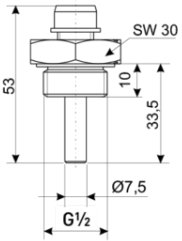

Pocket G⅜ x 75

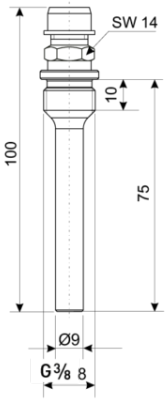

Pocket G½ x 75

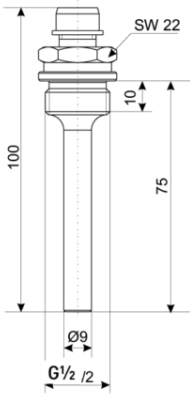

Pocket G½B x 85/120/210

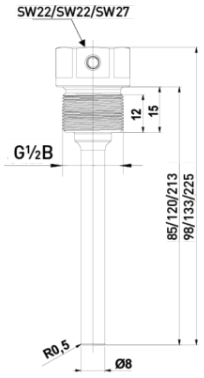

Generated: 25.11.2026 06:20 | All rights reserved

Installation type of temperature sensors, Installation recommandations

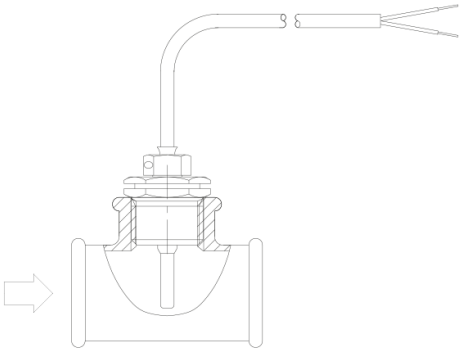

Example 1

Direct immersion sensor, mounted in a T-fitting with connecting nipple

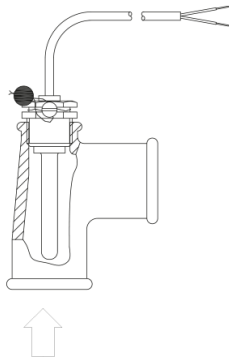

Example 2

Pocket sensor, mounted in a T-fitting with pocket

- Pay attention to the direction of flow

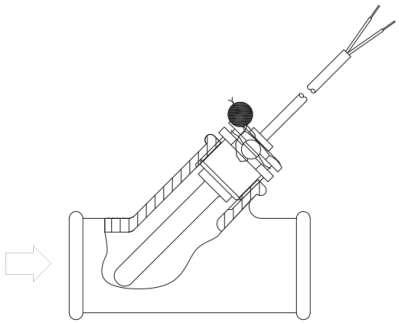

Example 3

Pocket sensor, mounted in a T-fitting with a 45° angle with pocket

- Pay attention to the direction of flow

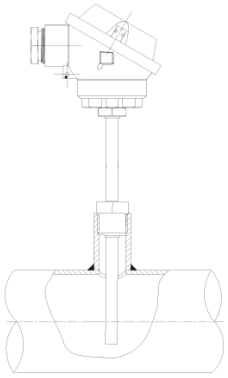

Example 4

Head sensor, mounted in a T-fitting

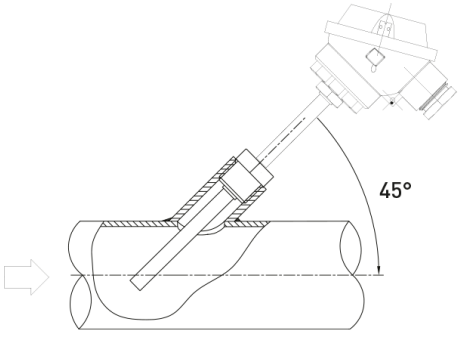

Example 5

Head sensor, mounted in a T-fitting with a 45° angle

- Pay attention to the direction of flow

Generated: 25.11.2026 06:20 | All rights reserved

Installation requirements

Sensor mounting

The cables of the flow and return flow sensor should always be the same length and cross section in order to prevent differing cable resistance (exception: head sensor and calculation unit in a 4-wire system). In accordance with EN 1434-2 Section 3.3.4, the supplied cable of the flow and return flow sensor must not be shortened or lengthened. The sensors are twin sensors. They are supplied in pairs and must also be used in pairs for the same calculation unit. The active part of the sensor must be located in the middle of the pipework; with the tip preferably directed against the flow.

Installation recommendations

Pay attention to the symmetrical positioning of flow and return flow sensors, i. e. the two sensors of a measuring system must be installed in the same manner (e. g. both in the pipe bend). Don't mix direct installations with installation in pockets. This ensures that the temperature difference is recorded with the best possible accuracy.

Pocket mounting

When installing the immersion sleeves, make sure their entire length is completely flushed by hot water.

Important: Always consider cable insulation when dimensioning. Provide sufficient space to ensure the sensor can be easily removed from the permanently mounted immersion sleeve.
In order to achieve the best possible measuring accuracy, only use original immersion sleeves provided by the manufacturer in combination with the supplied temperature sensors.

Insulation

Cable insulation must allow permanent access to the locking screw of the sensor immersion sleeve and ensure the sensor can be disassembled effortlessly for service and maintenance tasks.

Generated: 25.11.2026 06:20 | All rights reserved