

CF-51 and CF-55

Thermal energy meter for small measuring points

Your benefits

- Big display:
  Easy to read
- Universal applicable:
  - Wall-mounted model (Volume measuring meter UNICO® and MTW)
  - Different power supply possibilities
- Option cards for diverse functionalities:
  - Economical basic device
  - Additional functionalities feasible

Applications

- Metering of heat and/or cooling consumption in building management
- Energy measurement for local or remote reading

Properties

- Electronic calculator and LCD-resolution 7 digits
- Temperature measuring range 0 - 130 °C
- Temperature sensor Pt 100
  - CF-51: 2-wires
  - CF-55: 2- or 4-wires
- Non-volatile memory EEPROM and 24 month register
- Supply via 12-year battery, mains or M-Bus (pay attention to versions)
- Maximum values with time stamp
- Can be combined with the following volume measuring meters:
  - Mechanical impeller meters with Reed-pulser
  - Ultrasonic meters with Reed-pulser
- Standard EN 1434
- CE Conformity according European Measuring Instruments Directive (MID)

Options

- Special version for combined heat/cold measurements (special programming)
- Option cards for:
  - M-Bus / water meter inputs
  - M-Bus / 2 pulse outputs energy + volume
  - M-Bus Power / 2 water meter inputs
  - Double M-Bus (only CF-55)
  - LonWorks, FTT-10A / 2 water meter inputs (separate supply 24 V AC/DC necessary)
  - Modbus RTU (RS485) / 2 water meters inputs (Power supply module 230 V AC necessary)
- Optional external EquaScan - wireless pulse Module pMIU

CF-51 Calculator - EPe20526

CF-55 Calculator - EPe20527

GWF AG
Obergrundstrasse 119
6005 Lucerne, Switzerland

T +41 41 319 50 50
info@gwf.ch, www.gwf.ch

Technical support:
T +41 41 319 52 00, support@gwf.ch

Last updated: 04.09.2026
Generated: 25.11.2026 06:20 | All rights reserved

Technical Data UNICO®

Execution			UNICO®		
Nominal diameter	**DN**	**mm**	**15**	**20**	**20**
Operating pressure	**PN**	**bar**	**16**	**16**	**16**
Connection thread on meter	G...B	Inch	¾	1	1
Connection thread on coupling	R...	Inch	½	¾	¾
Nominal flow rate	**q_p**	**m^3/h**	**1,5**	**1,5**	**2,5**
Maximum flow rate	q_s	m^3/h	3	3	5
Minimum flow rate horizontal ± 5 %	q_i	l/h	30	30	50
Pulse value of volume measuring meter		l/Imp.	2,5	2,5	2,5
Kvs-value		m^3/h	3	3	5
Temperature range		°C	2...90/120	2...90/120	2...90/120
Installation position (Flow direction)			←→↑↓	←→↑↓	←→↑↓
Standard measuring range	q_i/q_p		1:50	1:50	1:50

Dimensions			UNICO®		
Length without couplings	**A**	**mm**	**110**	**130**	**130**
Length with couplings		mm	184	222	222
Width	B	mm	72	72	72
Height with pulser and magnetic protection cover	C	mm	108	108	108
Height from pipe centre line	D	mm	90	90	90

Dimension Diagram CF-51 / CF-55 / UNICO®

Calculator CF-51/CF-55

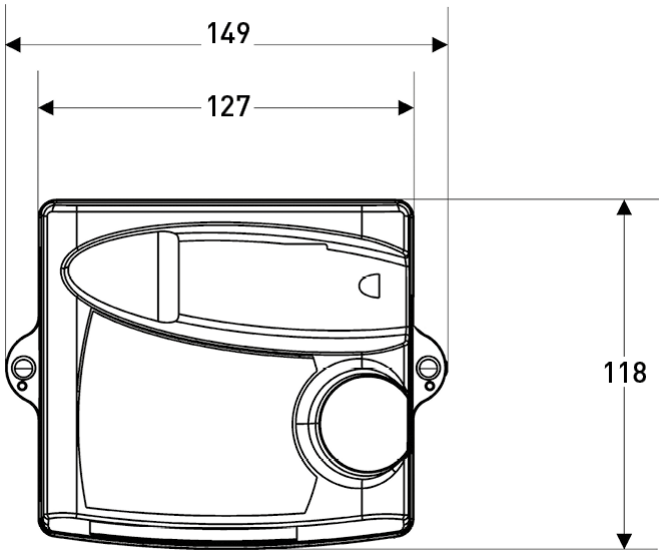

UNICO®

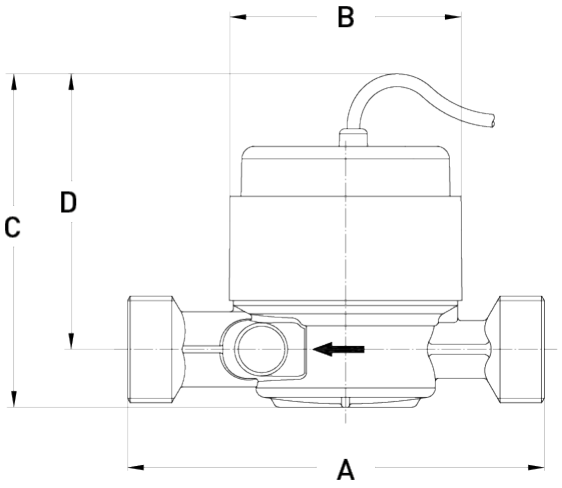

Generated: 25.11.2026 06:20 | All rights reserved

Technical Data MTW / MTW-VS / MTW-VF

Execution			MTW (horizontal)					MTW-VS or -VF (vertical)[1]			
Nominal diameter	**DN**	**mm**	**20**	**25**	**32**	**40**	**50**	**20**	**25**	**32**	**40**
Operating pressure	**PN**	**bar**	**16**	**16**	**16**	**16**	**16**	**16**	**16**	**16**	**16**
Connection thread on meter	G...B	Inch	1	1¼	1½	2	2⅜	1	1¼	1½	2
Connection thread on coupling	R...	Inch	¾	1	1¼	1½	2	¾	1	1¼	1½
Nominal flow rate	**q_p**	**m^3/h**	**2,5**	**3,5**	**6**	**10**	**15**	**2,5**	**3,5**	**6**	**10**
Maximum flow rate	q_s	m^3/h	5	7	12	20	30	5	7	12	20
Minimum flow rate ± 5 %	q_i	l/h	50	70	120	200	300	50	70	120	200
Pulse value of volume measuring meter		l/Imp.	2,5	2,5	2,5	25	25	2,5	2,5	2,5	25
Kvs-value		m^3/h	5	10	12	20	30	5	10	12	20
Temperature range		°C	2...90/120					2...90/120			
Installation position			←→	←→	←→	←→	←→	↑↓	↑↓	↑↓	↑↓
Standard measuring range	q_i/q_p		1:50	1:50	1:50	1:50	1:50	1:50	1:50	1:50	1:50

Dimensions			MTW (horizontal)					MTW-VS or -VF (vertical)[1]			
Length without couplings	**A**	**mm**	**220[2]**	**260**	**260**	**300**	**300**	**105**	**150**	**150**	**200**
Length with couplings		mm	312	352	372	432	452	197	242	262	332
Total height	B	mm	127	137	137	163	177	-	-	-	-
Meter height from pipe centre line	C	mm	87	94	94	117	120	-	-	-	-
Meter depth	D	mm	-	-	-	-	-	148	169	183	226
Meter depth from pipe centre line	E	mm	-	-	-	-	-	130	143	156	190
Meter width	F	mm	95	100	100	135	151	95	98	101	139

1) -VS = Vertical riser / -VF = Vertical down pipe 2) Also supplied in length 190 mm

Dimension Diagram MTW / MTW-V

MTW

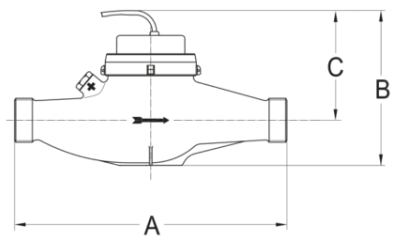

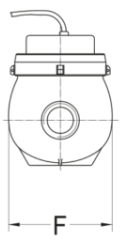

MTW-V

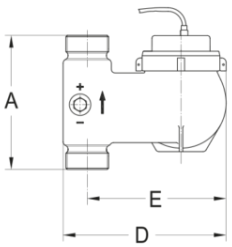

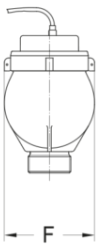

Generated: 25.11.2026 06:20 | All rights reserved

Technical Data US Echo II

Execution			US ECHO II																				
Nominal diameter	**DN**	**mm**	**15**	**15**	**20**	**20**	**20**	**20**	**20**	**20**	**20**	**20**	**25**	**25**	**25**	**25**	**25**	**25**	**32**	**40**	**40**	**40**	**50**
Operating pressure	**PN**	**bar**	**16**	**16**	**16**	**16**	**-**	**16**	**16**	**-**	**16**	**16**	**-**	**16**	**16**	**-**	**16**	**16**	**-**	**16**	**16**	**16**	**-**	**-**
Operating pressure (flanged)	**PN**	**bar**	**-**	**-**	**-**	**-**	**25**	**-**	**-**	**25**	**-**	**-**	**25**	**-**	**-**	**25**	**-**	**-**	**25**	**-**	**-**	**-**	**25**	**25**
Connection thread on meter	G...B	Inch	¾	¾	1	1	-	1	1	-	1	1	-	1¼	1¼	-	1¼	1¼	-	1½	2	2	-	-
Connection thread on coupling	R...	Inch	½	½	¾	¾	-	¾	¾	-	¾	¾	-	1	1	-	1	1	-	1¼	1½	1½	-	-
Nominal flow rate	**q_p**	**m³/h**	**0,6**	**1,5**	**0,6**	**0,6**	**0,6**	**1,5**	**1,5**	**1,5**	**2,5**	**2,5**	**2,5**	**3,5**	**3,5**	**3,5**	**6**	**6**	**6**	**6**	**10**	**10**	**10**	**15**
Maximum flow rate	q_s	m³/h	1,2	3	1,2	1,2	1,2	3	3	3	5	5	5	7	7	7	12	12	12	12	20	20	20	30
Minimum flow rate	q_i	l/h	6	15	6	6	6	15	15	15	25	25	25	35	35	35	60	60	60	60	100	100	100	150
Starting flow		app. l/h	1,2	3	1,2	1,2	1,2	3	3	3	5	5	5	7	7	7	12	12	12	12	20	20	20	30
Kvs-value		m³/h	3,2	3,2	3,2	3,2	3,2	3,2	3,2	3,2	6	6	6	10,4	10,4	10,4	16,4	16,4	16,4	16,4	33,2	33,2	33,2	33,2
Temperature range		°C	5...130	5...130	5...130	5...130	5...130	5...130	5...130	5...130	5...130	5...130	5...130	5...130	5...130	5...130	5...130	5...130	5...130	5...130	5...130	5...130	5...130	5...130
Measuring range	q_i/q_p		1:100	1:100	1:100	1:100	1:100	1:100	1:100	1:100	1:100	1:100	1:100	1:100	1:100	1:100	1:100	1:100	1:100	1:100	1:100	1:100	1:100	1:100

Dimensions and weights			US ECHO II																				
Length without couplings	**L**	**mm**	**110**	**110**	**130**	**190**	**-**	**130**	**190**	**-**	**130**	**190**	**-**	**150**	**260**	**-**	**150**	**260**	**-**	**260**	**200**	**300**	**-**	**-**
Height	H	mm	72	72	72	72	72	72	72	72	72	72	72	77	77	77	77	77	77	77	85	85	85	85
Height	h	mm	18	18	18	18	-	18	18	-	18	18	-	23	23	-	23	23	-	23	35	35	-	-
Length with flanges	**L**	**mm**	**-**	**-**	**-**	**-**	**190**	**-**	**-**	**190**	**-**	**-**	**190**	**-**	**-**	**260**	**-**	**-**	**260**	**-**	**-**	**-**	**300**	**270**
Height with flanges	h	mm	-	-	-	-	52,5	-	-	52,5	-	-	52,5	-	-	57,5	-	-	57,5	-	-	-	82,5	82,5
Flange external dimension	D	mm	-	-	-	-	105	-	-	105	-	-	105	-	-	115	-	-	115	-	-	-	165	165
Hole circle diameter	L	mm	-	-	-	-	75	-	-	75	-	-	75	-	-	85	-	-	85	-	-	-	125	125
Number of screws		Pcs.	-	-	-	-	4	-	-	4	-	-	4	-	-	4	-	-	4	-	-	-	4	4
Weight		app. kg	1,1	1,1	1,2	1,5	3,2	1,2	1,5	3,2	1,1	1,4	3,2	1,5	1,9	3,6	2,4	2	3,7	1,8	2,5	5,5	7	6,5

Dimension Diagram US Echo II

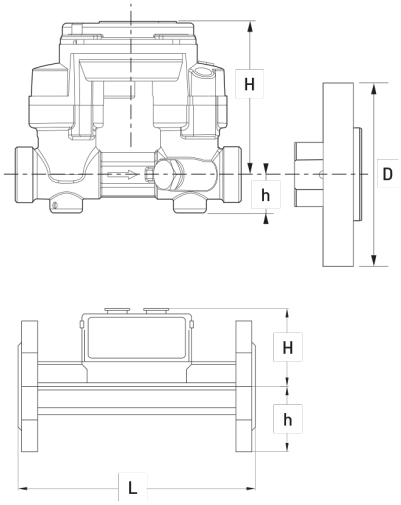

Calculator executions

Wall-mounted model (split version)

CF-51

- ... Battery (12 years)
- ... Mains supply (230 V AC)
- ... Supply via M-Bus

CF-55

- ... Battery (12 years)
- ... Mains supply (230 V AC)
- ... Supply via M-Bus

Generated: 25.11.2026 06:20 | All rights reserved