Water Wastewater

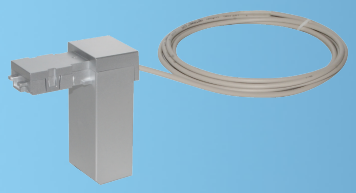

ECO E1 & E2 Module

sonico® EDGE

Your benefits

- Serial End-to-End data communication:
  Real time data communication from the meter to the Back-End system
- Detailed volume and flow rate information:
  Cumulative, forward and reverse volume incl. information about actual flow rate in multiple units
- Temperature information:
  Precise water and environmental temperature measurements
- Alarm status:
  Detailed alarm status of the sonico® flow meter
- High flexibility:
  Multiple communication modules attached to the meter can operate simultaneously
- Water proof design:
  Sealed housing (IP68)
- Plug & Play:
  Easy and fast on-site installation with automatic NFC interface detection

Applications

- Industrial application
- Building management system
- Installation in harsh and flooded environment

Properties

- Compatible with sonico® EDGE flow meter
- ECO E1 protocol with GWF Encoder based sonico® data
- ECO E2 protocol with extended sonico® data
- Installation in difficult and flooded installation situations
- Simple installation and automatic start-up after connecting to meter
- Snap-in NFC module slots – no connectors or cables needed
- Continuous and tamper-proof connection, thoroughly reliable results
- Can be factory fitted or retrofitted at installation site without breaking metrological seal
- CE Approval
- Battery powered module

Options

- Data logging in combination with various data loggers providing:
  - NB-IoT (Multiple Bands)
  - 4G (Fall back options)

GWF AG
Obergrundstrasse 119
6005 Lucerne, Switzerland

T +41 41 319 50 50
info@gwf.ch, www.gwf.ch

Technical support:
T +41 41 319 52 00, support@gwf.ch

Last updated: 22.09.2026
Generated: 24.11.2026 05:22 | All rights reserved

Dimensions (mm)

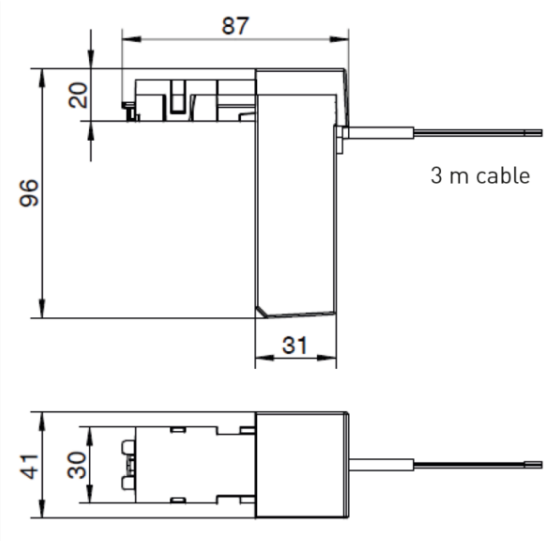

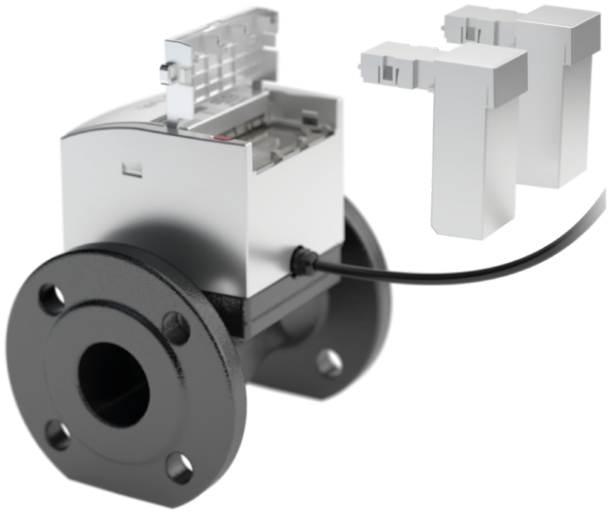

Technical Data

Specifications	
Approval	CE
Protection class	IP68
Protocol content E1 version	- Flow meter S/N - Manufacturer ID - Module status with Status information - Cumulative volume
Protocol content E2 version	- Flow meter S/N - Manufacturer ID - Module status with status information - Cumulative volume - Flow rate and direction - Forward volume - Reverse volume - Water temperature - Environmental temperature - Meter alarms - Meter mode - External power status
Cable length/supplied	3 m including cable joint for cable extension
Maximum cable length	30 m
Weight	app. 250 g

Power supply	
Battery	1 x Lithium Li/$SOCl_2$ A size (not replaceable)
Typical battery lifetime	15 years (depending on environment) with 15 min read out cycles

Generated: 24.11.2026 05:22 | All rights reserved

Conditions	
Operational and storage temperature	-20 to +70 °C
Relative humidity	0 to 100 % (IP68)
ECO E1: Min. req. FW version sonico® EDGE	COM 1.XX
ECO E2: Min. req. FW version sonico® EDGE	COM 2.XX

Information data package	Data Example	ECO E1	ECO E2
Flow meter S/N	12345678	x	x
Manufacturer ID	GWF	x	x
Firmware version	Vxy	x	x
Status information	- No error - Error - Module not attached - Module not responding - Wrong messages received	x	x
Cumulative volume	000000022222 L	x	x
Flow rate	20000 L/h		x
Forward volume	000000033333 L		x
Reverse volume	000000011111 L		x
Environmental temperature	21 °C		x
Water temperature	15 °C		x
Flow meter alarms	0		x
Flow meter status	Meter mode: - Operation - Testbench Flow direction arrow: - No flow direction set - Arrow direction from right to left - Arrow direction from left to right External power: - Connected - Not connected		x

Generated: 24.11.2026 05:22 | All rights reserved

Electrical scheme

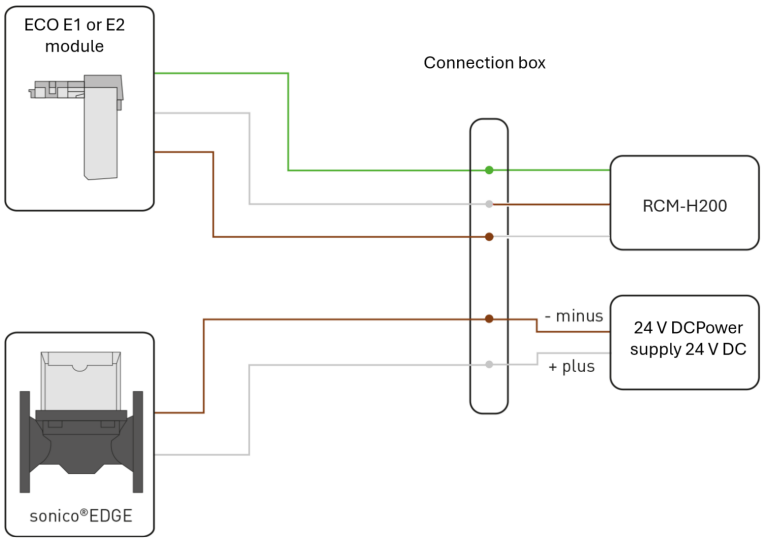

Cable connection

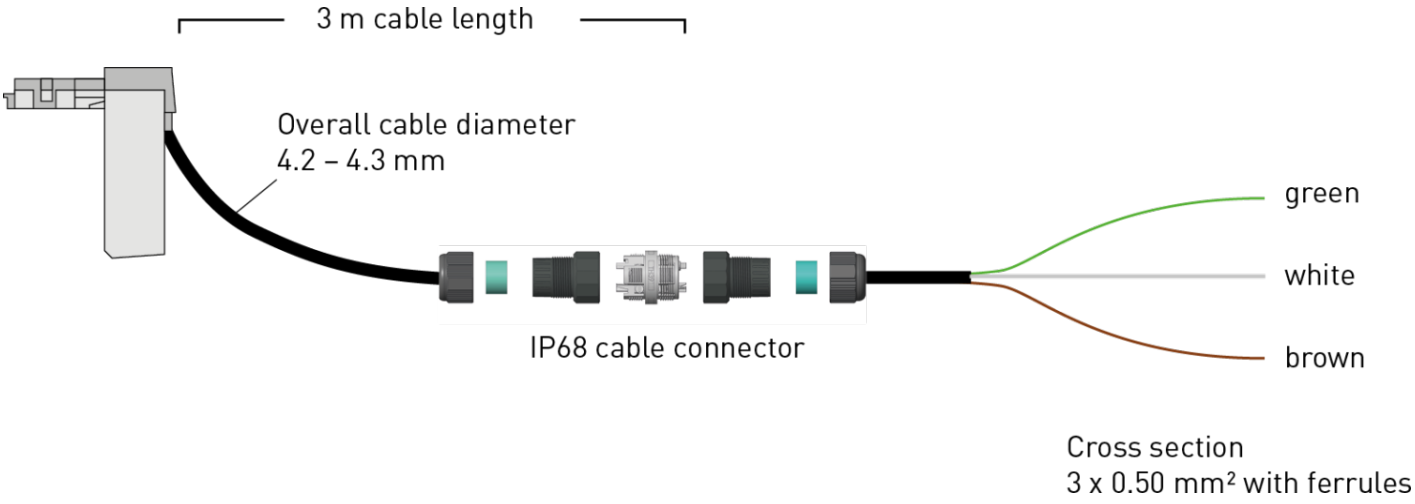

Generated: 24.11.2026 05:22 | All rights reserved