

Pulse Module

sonico® EDGE

Your benefits

- High-resolution:
  Pulse output with water flow direction output
- High flexibility:
  2 pulse modules can operate simultaneously with different pulse values e.g. 1 l / 0.264 US GAL up to 10‘000 l / 26417.2 US GAL
- Water proof design:
  Sealed housing (IP68)
- Plug & Play:
  Easy and fast on-site installation with auto NFC interface-detection
- Electrical Isolation:
  Meter and pulse module are galvanically separated
- No switch bounce:
  Stable electronic pulses

Properties

- Snap-in NFC module slots – no connectors or cables needed
- Continuous and tamper-proof connection, thoroughly reliable results
- Can be factory fitted or retrofitted at installation site without breaking metrological seal
- Provides a high-resolution pulse output in test bench mode of 0.1 l up to max. flow
- Compatible with all versions of sonico® EDGE meters
- CE Approval

Applications

- Data logging in combination with various data loggers
- SCADA system
- Building management system
- Industrial control applications
- IoT modules
- Installation in harsh and flooded environment

GWF AG
Obergrundstrasse 119
6005 Lucerne, Switzerland

T +41 41 319 50 50
info@gwf.ch, www.gwf.ch

Technical support:
T +41 41 319 52 00, support@gwf.ch

Last updated: 02.07.2026
Generated: 24.11.2026 03:12 | All rights reserved

Modes

Operating modes		
Mode 1	Channel 1 (white): Forward pulses	Channel 2 (yellow): Error (empty pipe or communication error)
Mode 2	Channel 1 (white): Forward pulses	Channel 2 (yellow): Reverse pulses
Mode 3	Channel 1 (white): Forward or reverse pulses	Channel 2 (yellow): Flow direction: Forward: Closed (Signal low) Reverse: Open (Signal high)

Dimensions (mm)

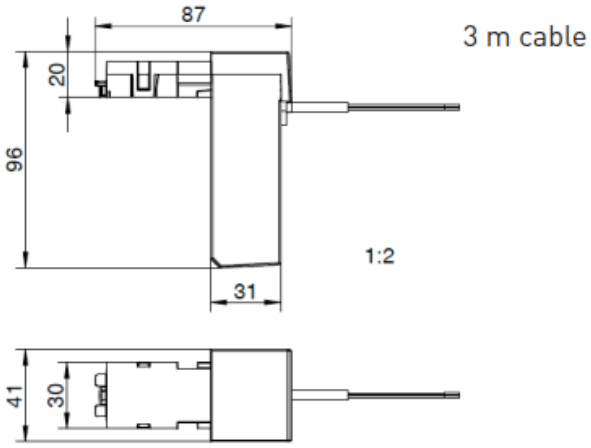

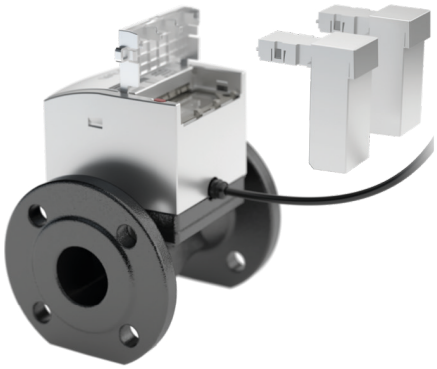

Generated: 24.11.2026 03:12 | All rights reserved

Technical Data

Specifications	
Compliance with standard	EN 300 220
Approval	CE
Protection class	IP68
Cable diameter	4,3 mm
Cable length/Supplied	3 m including cable joint for cable extension
Weight	app. 243 g
Maximum cable length	50 m

Power supply	
Voltage	No battery included. Min: 10 V Type: 24 V Max: 26 V
Short circuit output current	40 mA

Pulse output	
Output power	0,8 W / output
Max. current	40 mA
Max. voltage	48 V DC

Conditions	
Operational and storage temperature	-20 to +70 °C
Relative humidity	0 to 100 % (IP68)

Pulse length in relation to pulse value and meter sizes

Pulse weigth	l / US GAL	0,1 / 0.026		1 / 0.264					10 / 2.642						100 / 26.417							1000 / 264.172					
Pulse length[1]	ms	1	2	1	2	4	8	16	4	8	16	32	64	128	8	16	32	64	128	256	512	16	32	64	128	256	512
Meter size [mm]	50	X	X	X	X	X	X	X	X	X	X	X	X	X	X	X	X	X	X	X	X	X	X	X	X	X	X
	80	X		X	X	X	X		X	X	X	X	X		X	X	X	X	X	X	X	X	X	X	X	X	X
	100			X	X	X			X	X	X	X			X	X	X	X	X	X	X	X	X	X	X	X	X
	150			X	X				X	X	X				X	X	X	X	X	X		X	X	X	X	X	X
	200			X					X	X					X	X	X	X				X	X	X	X	X	X
	250			X					X	X					X	X	X	X				X	X	X	X	X	X
	300			X					X	X					X	X	X	X				X	X	X	X	X	X

Test mode pulses
Factory set pulses
X = other possible pulses

[1] Automatic pulse length reduction: In case the pulse frequency is too high and the defined pulse length becomes too long, the pulse length is reduced to the next lower pulse length.

Generated: 24.11.2026 03:12 | All rights reserved

NPN Connection (single voltage, signal active low)

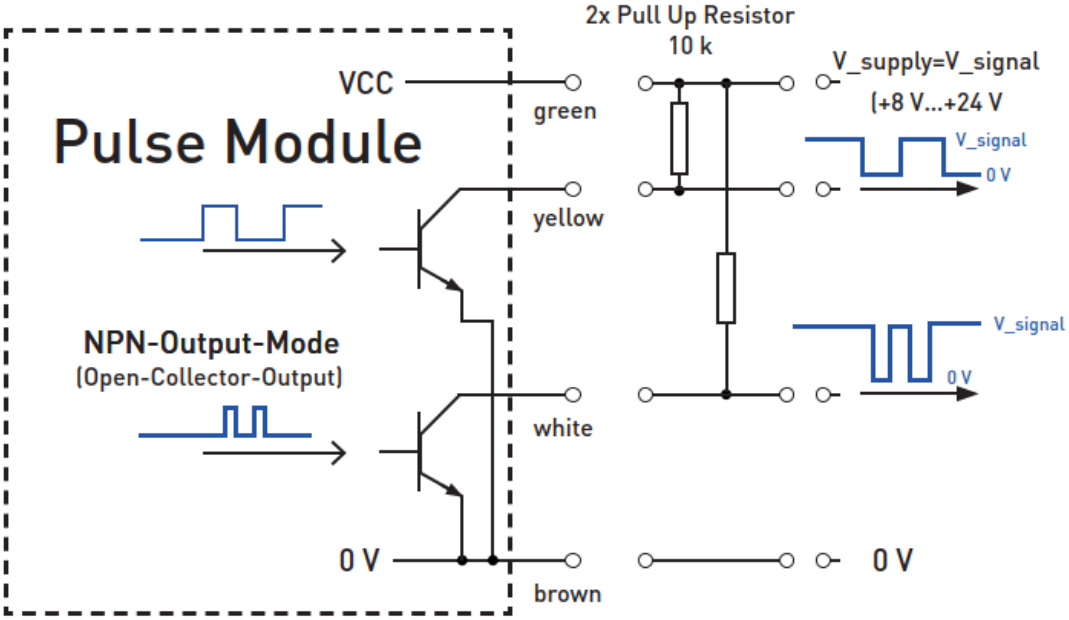

Pullup resistors required (typ. 10K), either at the end of the supplied cable (active driven) or in the external pulse collector unit (passive mode).

NPN Connection (dual voltages, signal active low)

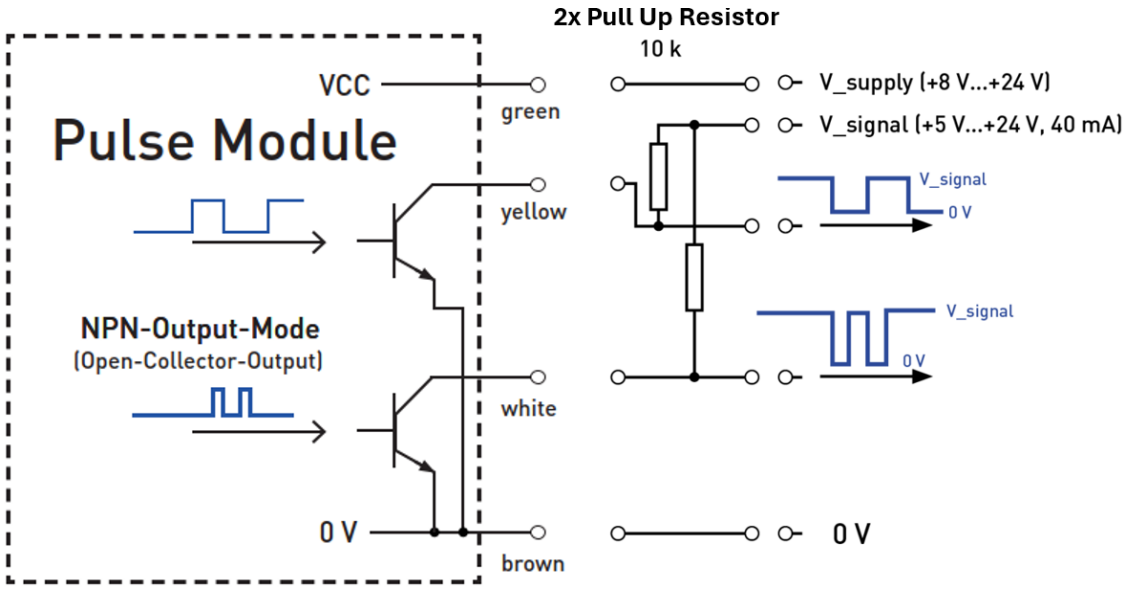

Power limitation for each signal line: 0,8 W

Generated: 24.11.2026 03:12 | All rights reserved

PnP Connection (signal active high)

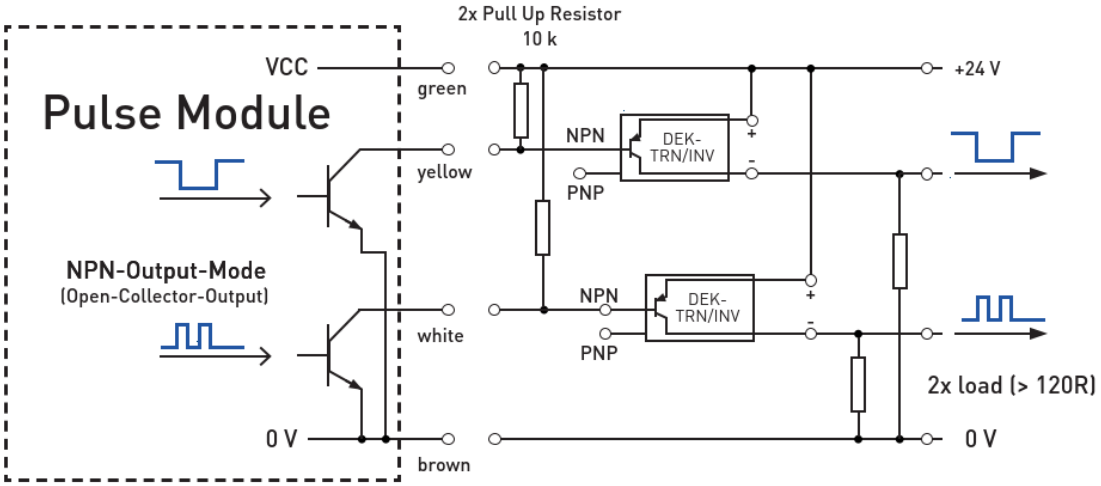

In addition to pullup resistors, NPN to PNP signal converter is required.
(For example: Phoenix Contact DEK-TR/INV Order No.: 2964319)

NPN Converts to PNP

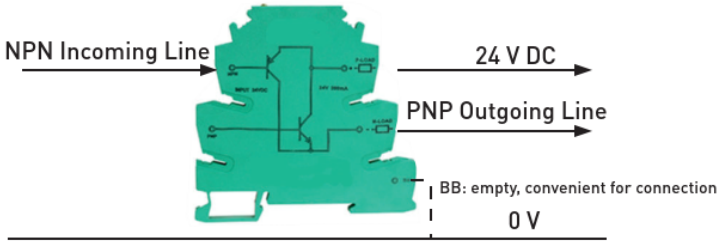

Connection to Relays (N/O or N/C contact)

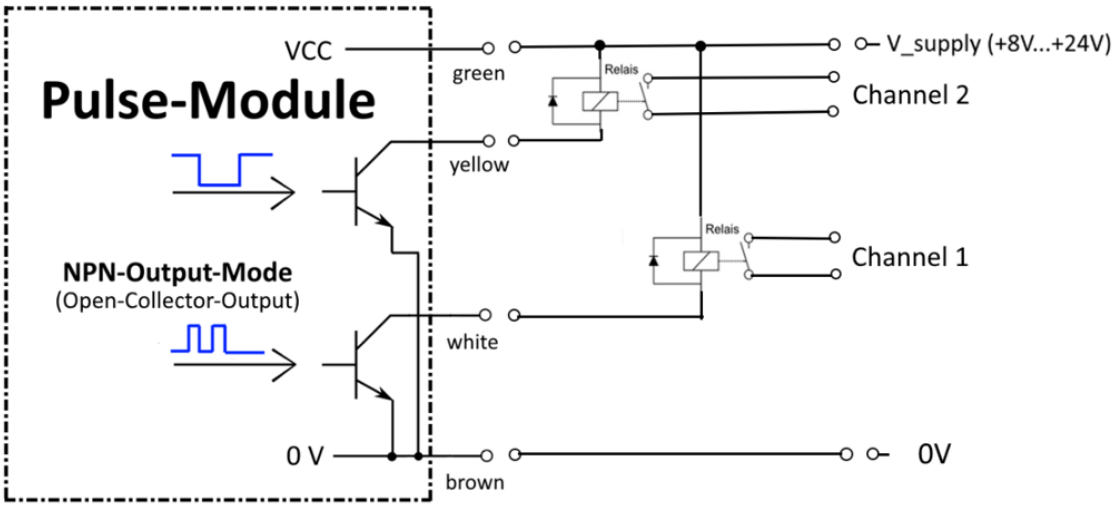

Generated: 24.11.2026 03:12 | All rights reserved