Water Wastewater



4-20 mA Module

sonico® EDGE

Your benefits

- High-resolution:
  4-20 mA current output volume flow (16 Bit) configurable
- Configurable volume:
  20 mA configurable over meter IR-interface and sonico® LIFE app
- Uni- or bidirectional current output modes:
  12 mA separation or absolute values for forward and reverse current output
- High flexibility:
  Easy and fast on-site installation with auto NFC interface-detection
- Water proof design:
  Sealed housing (IP68)
- Plug & Play:
  Easy and fast on-site installation with auto NFC interface-detection

Properties

- Three output modes for uni- or bidirectional flow measurements
- Snap-in NFC module slots – no connectors or cables needed
- Can be factory fitted or retrofitted at installation site without breaking metrological
- Compatible with all versions of sonico® EDGE meters
- Infrared configuration interface – Data security via AES-128-bit end-to-end encryption
- CE Approval

Applications

- SCADA system
- Industrial control application
- Building management system
- Data logging in combination with various data loggers
- Installation in harsh and flooded environment

GWF AG
Obergrundstrasse 119
6005 Lucerne, Switzerland

T +41 41 319 50 50
info@gwf.ch, www.gwf.ch

Technical support:
T +41 41 319 52 00, support@gwf.ch

Last updated: 02.07.2026
Generated: 26.11.2026 11:10 | All rights reserved

Modes

Operating modes			
Mode 1	For forward measurements only	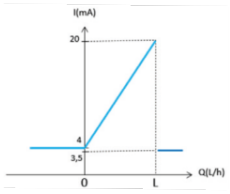	3.5 mA = Alarm, no NFC connection, flow rate exceeded, air in pipe or internal error. 4 mA = 0-flow 20 mA = Configurable unsigned flow in forward direction
Mode 2	For forward and reverse measurements	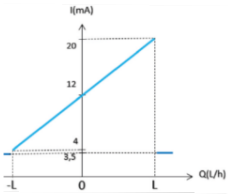	3.5 mA = Alarm, no NFC connection, flow rate exceeded, air in pipe or internal error. 4 mA = Configurable signed flow in reverse direction 12 mA = 0-flow 20 mA = Configurable signed flow in forward direction
Mode 3	For forward and reverse measurements	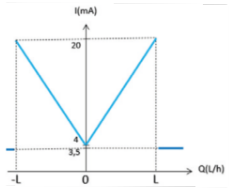	3.5 mA = Alarm, no NFC connection, flow rate exceeded, air in pipe or internal error. 4 mA = 0-flow 20 mA = Unsigned flow in forward or reverse direction

Dimensions (mm)

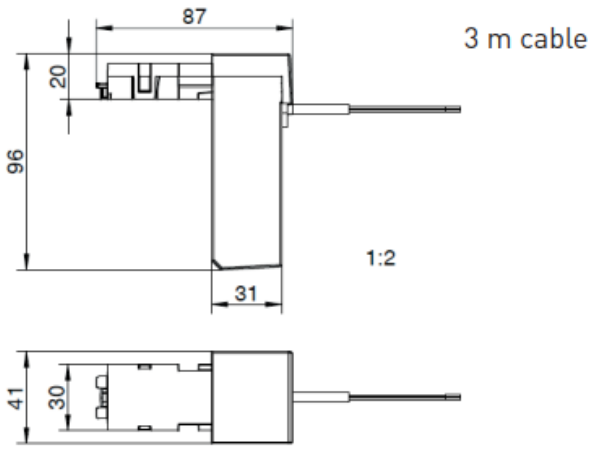

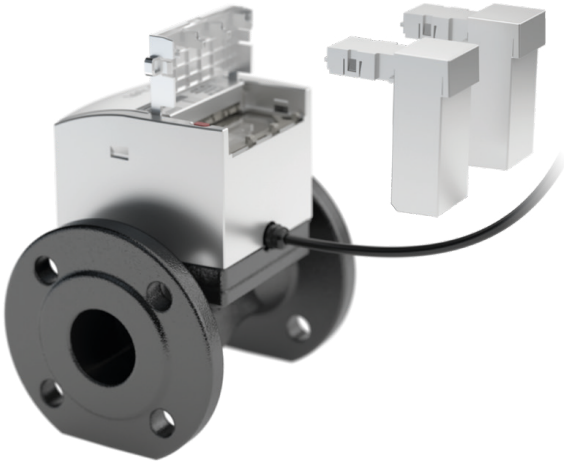

Generated: 26.11.2026 11:10 | All rights reserved

Technical Data

Specifications	
Compliance with standard	EN 300 220
Approval	CE
Protection class	IP68
Current output	4...20 mA, passive
Cable length/ supplied	3 m including cable joint for cable extension
Maximum cable length	500 m with same cable as provided
Weight	app. 243 g

Power supply	
Voltage	No battery included. Min: 10 V Typical: 24 V Max: 26 V
Current	<3 mA

Conditions	
Operational and storage temperature	-25 to +70 °C
Relative humidity	0 to 100 % (IP68)

4-20 mA module cable connection

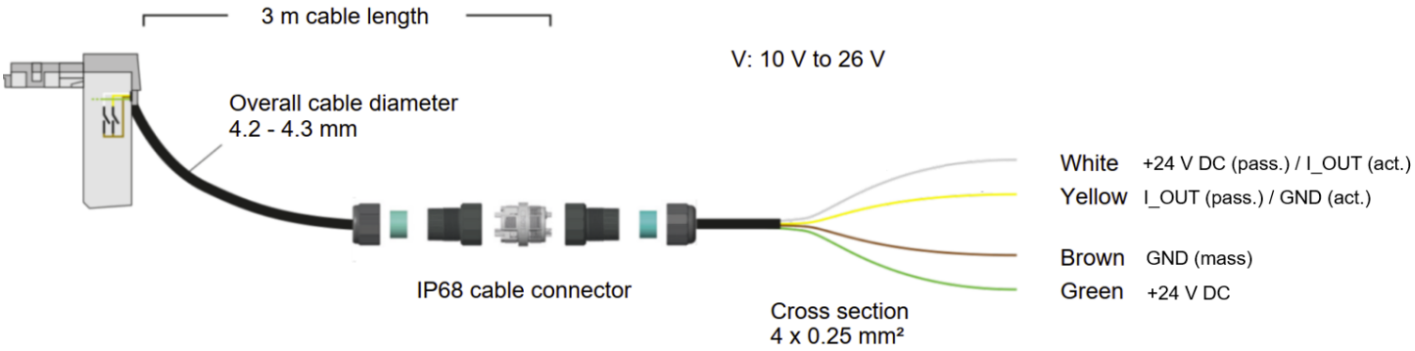

Generated: 26.11.2026 11:10 | All rights reserved

Electrical Scheme

1. Sonico® 4-20 mA module and meter connection schema using a passive read-out instrument.

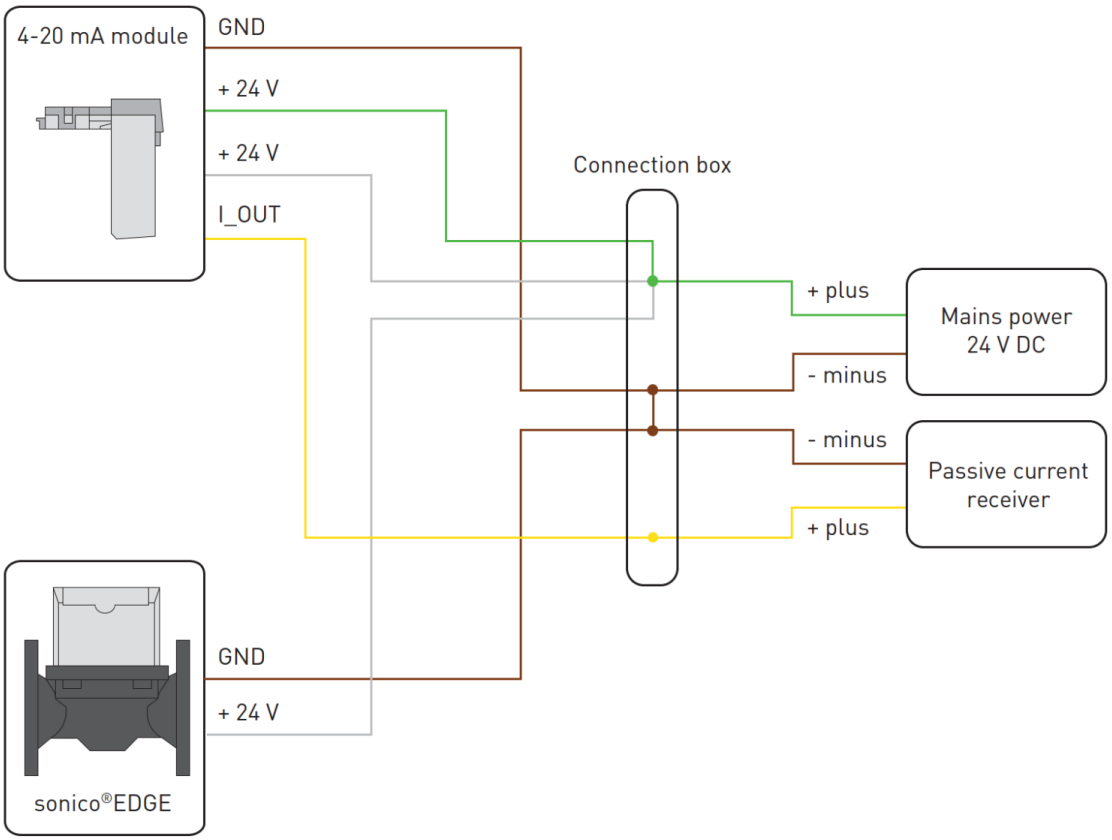

2. Sonico® 4-20 mA module and meter connection schema using an active read-out instrument.

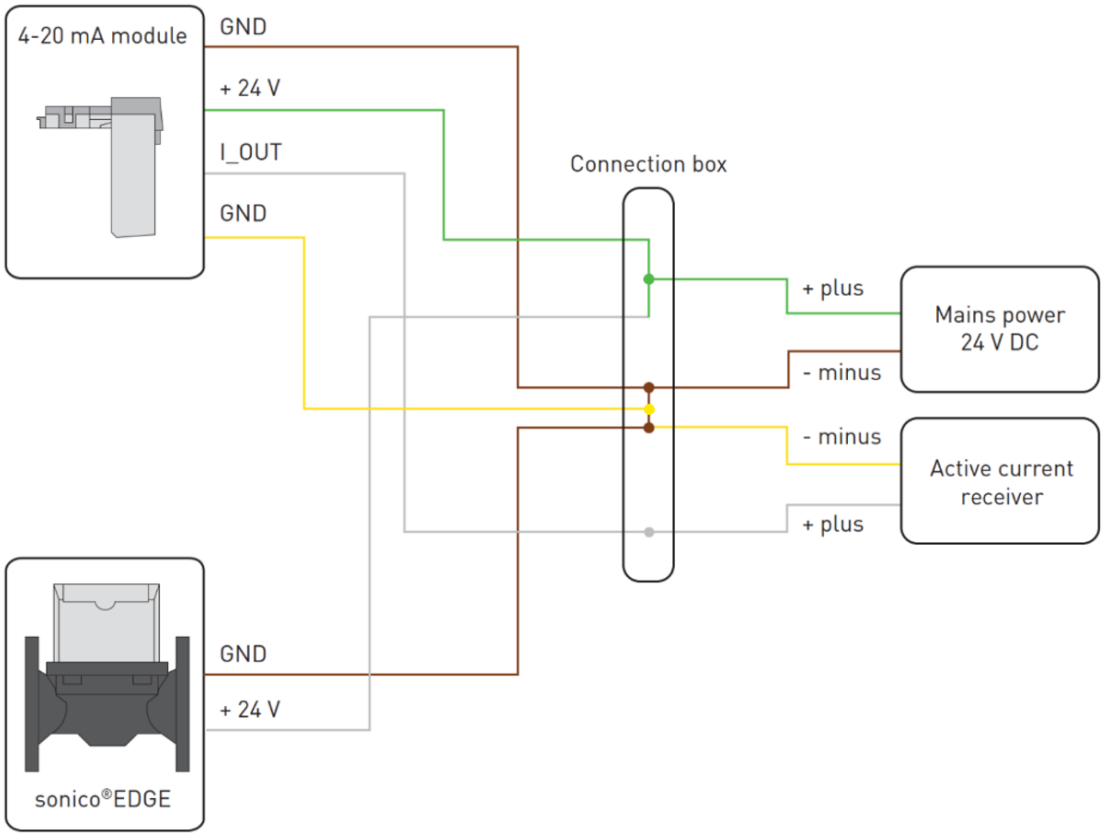

Generated: 26.11.2026 11:10 | All rights reserved