

ULTRAFLOW® 54

Ultrasonic volume measuring device

Your benefits

- Durable, wear-free ultrasonic volume measuring device:
  High measurement stability and operational reliability
- Compact design:
  Requires little installation space on site
- High resolution of pulse values:
  Precise instantaneous values
- MID-approved, including initial calibration:
  Approved for use in commercial transactions

Applications

- Particularly suitable for district heating applications (main meters, transfer stations, etc.) in billing transactions
- Replacement of mechanical impeller heat meters
- Heat consumption measurement in building services engineering
- Can only be used with MULTICAL® series calculators

Properties

- Nominal diameters:
  Heating: DN 15 to DN 125
- Nominal flow rates:
  Heat: q_p 0,6 to q_p 100
- Low pressure loss
- No moving parts
- Signal transmission to the computing unit and power supply to the volume measuring device via a 3-wire cable
- Medium temperature:
  Heat: 15 to 130 °C
  From 90 °C, a flange meter and the wall mounting of the calculator are recommended.
- Type approval/certification:
  - Heat: CE Conformity acc. European Measuring Instruments Directive (MID)

Options

- Cable extension box (10–30 m) for signal cables between Ultraflow and Multical
- Pulse transmitter with its own power supply for cable lengths > 30m between Ultraflow and Multical

GWF AG
Obergrundstrasse 119
6005 Lucerne, Switzerland

T +41 41 319 50 50
info@gwf.ch, www.gwf.ch

Technical support:
T +41 41 319 52 00, support@gwf.ch

Last updated: 28.09.2026
Generated: 23.11.2026 11:59 | All rights reserved

Technical Data

ULTRAFLOW® 54 (DN 15 - 40)															
Nominal flow rate	**q_p**	**m^3/h**	**0,6**	**0,6**	**1,5**	**1,5**	**2,5**	**2,5**	**3,5**	**3,5**	**6**	**6**	**6**	**10**	**10**
Nominal diameter	**DN**	**mm**	**15**	**20**	**20**	**20**	**20**	**20**	**25**	**25**	**25**	**25**	**32**	**40**	**40**
Connection thread on the meter	G...B	Inch	¾	1	1	flan-ge	1	flan-ge	1¼	flan-ge	1¼	flan-ge	flan-ge	2	flan-ge
Maximum flow rate	q_s	m^3/h	1.2	1.2	3	3	5	5	7	7	12	12	12	20	20
Minimum flow rate	q_i	l/h	6	6	15	15	25	25	35	35	60	60	60	100	100
Starting value		l/h	2	2	3	3	5	5	7	7	12	12	12	20	20
Kvs value[1]		m^3/h	3.5	3.5	4.9	3.2	8.2	13.4	13.4	13.4	24.5	13.4	13.4	40	40
Meter factor[2]		p/l	300	300	100	100	60	60	50	50	25	25	25	15	15
Graph			**A**	**A**	**B**	**B1**	**C**	**D**	**D**	**D**	**E**	**D**	**D**	**F**	**F**
Maximum pressure	PN	bar	25												
Standard measuring range	q_p / q_i		1:100												
Protection class			IP65												

1] q=kv x √Δp
2] The meter factor appears from the type label

ULTRAFLOW® 54 (DN 50 - 125)								
Nominal flow rate	**q_p**	**m^3/h**	**15**	**25**	**40**	**60**	**100**	**100**
Nominal diameter	**DN**	**mm**	**50**	**65**	**80**	**100**	**100**	**125**
Connection			flange	flange	flange	flange	flange	flange
Maximum flow rate	q_s	m^3/h	30	50	80	120	200	200
Minimum flow rate	q_i	m^3/h	0.15	0.25	0.4	0.6	1	1
Starting value		l/h	30	50	80	120	200	200
Kvs value[3]		m^3/h	40	102	179	373	373	373
Meter factor[4]		p/l	10	6	5	2.5	1.5	1.5
Graph			**F**	**G**	**H**	**J**	**J**	**J**
Maximum pressure	PN	bar	25					
Standard measuring range	q_p / q_i		1:100					
Protection class			IP65					

3] q=kv x √Δp
4] The meter factor appears from the type label

Generated: 23.11.2026 11:59 | All rights reserved

Pressure loss

The pressure loss in a flow sensor is stated as the maximum pressure loss at q_p.
According to EN 1434, the maximum pressure loss must not exceed 0,25 bar.

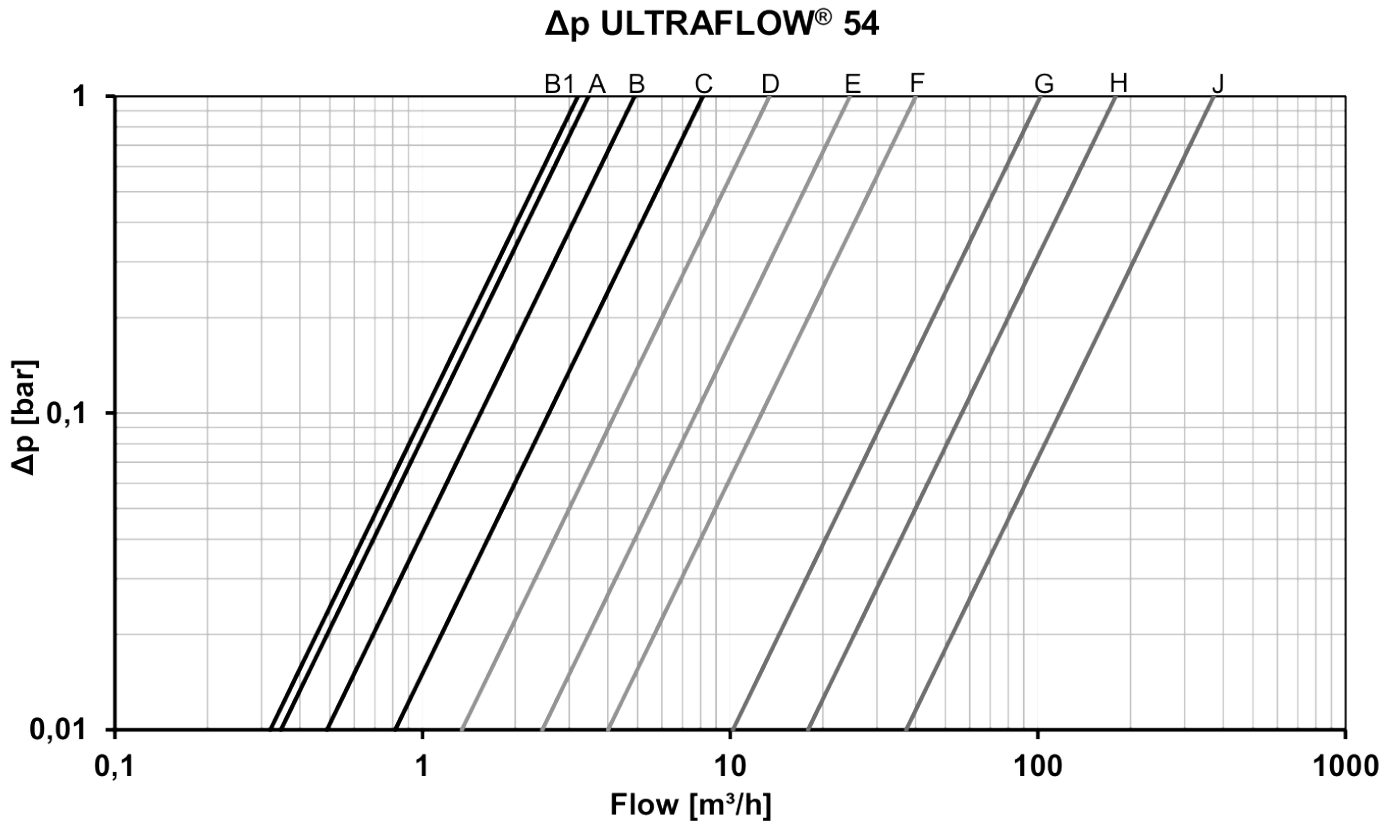

Generated: 23.11.2026 11:59 | All rights reserved

Mechanical data

ULTRAFLOW® 54	
Accuracy class	2
Electromagnetic environment	Fulfils EN 1434 class C, MID E1 and E2
Mechanical environment	MID M1 and M2
Ambient conditions	5...55 °C, closed location (installation indoors)
Protection class	IP65
Medium in flow sensor	Water – recommended water quality as in CEN TR 16911 and AGFW FW510
Medium temperature[5]	15...130 °C or narrower range
Storage temperature (empty sensor)	-25...60 °C
Pressure stage	PN16/PN25, PS25 see marking
Straight inlet requirement	0D (according to EN 1434)
Installation angle	Horizontally, vertically and at an angle

5] At medium temperatures above 90 °C, the use of flange meters is recommended. At medium temperatures above 90 °C or below the ambient temperature, the calculator and Pulse Transmitter/Pulse Divider must not be mounted on the flow sensor. Instead wall mounting is recommended.

Materials	
Wetted parts:	
Housing, thread	DZR brass (dezincification-resistant brass) CW511L with max 0,1 % Pb, implemented in 2024
Blind plug	DZR brass (dezincification resistant brass) CW510L with max 0.1% Pb, implemented in 2024
Housing, flange	Stainless steel, W.no. 1.4308
Transducer (membrane)	Stainless steel, W.no. 1.4404
O-ring	Ethylene propylene (EPDM)
Reflector base/reflector	Thermoplastic, PESU 30% GF and stainless steel, similar to AISI 304 or AISI 316/ Stainless steel, similar to AISI 304 or AISI 316
Measuring tube	Thermoplastic, PESU – only qp 1,5 - 2,5 Thermoplastic, PESU 30% GF
Electronic housing:	
Base (flow sensor)	qp 1,5 - 2,5 Thermoplastic, PESU 30 % GF qp ⩾ 3,5 Thermoplastic PC 10 % GF
Cover (flow sensor)	qp 1,5 - 2,5 Thermoplastic, PC 10% GF qp ⩾ 3,5 Thermoplastic, PC 20% GF
Connection cable	Silicone cable (3 x 0.25 mm²)

Generated: 23.11.2026 11:59 | All rights reserved

Approved meter data

ULTRAFLOW® 54	
Heat meter in accordance with MID-2014/32/EU	DK-0200-MI004-008, DK-0200-MI004-033 EU-Type Examination Certificate DK-0200-MID-D-001 MID-certified according to Module D
Standards and norms	EN 1434:2007/AC:2007 EN 1434:2015+A1:2018 EN 1434:2022 WELMEC 7.2:2022
EU directives	Low Voltage Directive Electromagnetic Compatibility Directive Pressurised Equipment Directive (DN 50...DN 125 category I)
EN 1434 designation	Environmental class C Fast response meter
MID mechanical environment	Class M1 and M2
MID electromagnetic environment	Class E1 and E2
MID climatic environment	5...55 °C, condensing, closed location (indoors)
MID accuracy class	2

Accuracy

ULTRAFLOW® 54	
Class 3	$E_f = \pm(3 + 0{,}05\ q_p/q)$, but not above ±5 %
Class 2	$E_f = \pm(2 + 0{,}02\ q_p/q)$, but not above ±5 %
Typical[6]	$E_f = \pm(1 + 0{,}01\ q_p/q)$

6) Documented with DANAK-accredited certificate at flow qi, 0,1 qp and qp.

Flow sensor tolerances qp:qi 100:1 (qp 1,5 m³/h)

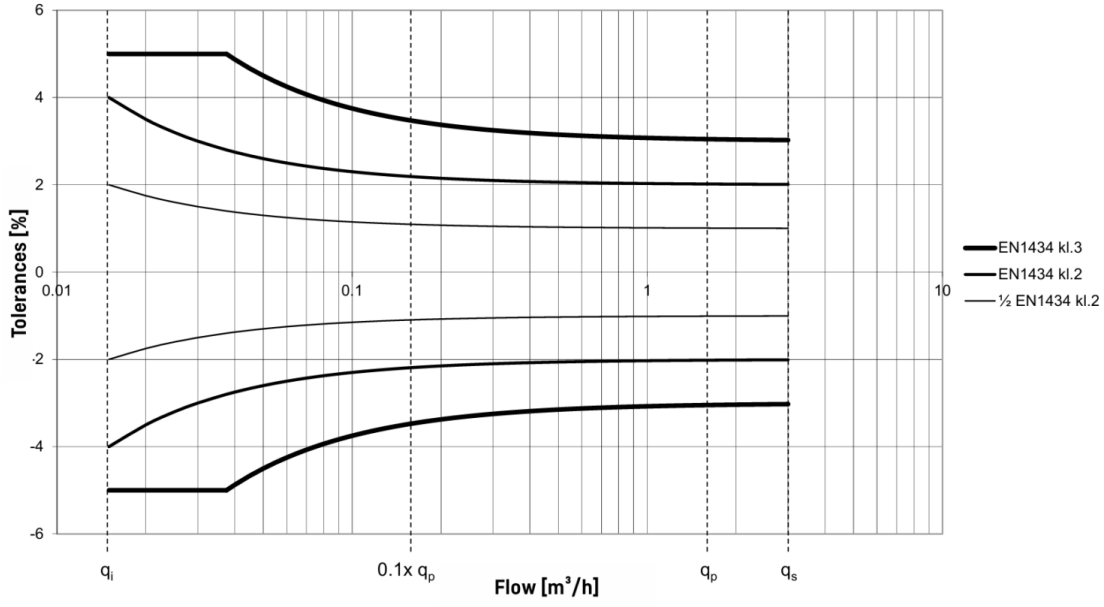

Generated: 23.11.2026 11:59 | All rights reserved

Dimensioned sketches

ULTRAFLOW® 54 flow sensors have a compact design and can be ordered with 2.5, 5 and 10 m signal cable to the calculator. Flow sensors of size qp 0.6...10 m³/h with threaded meter housings have the provision for built-in temperature sensors (M10x1 connection).

ULTRAFLOW® 54, G¾B and G1B

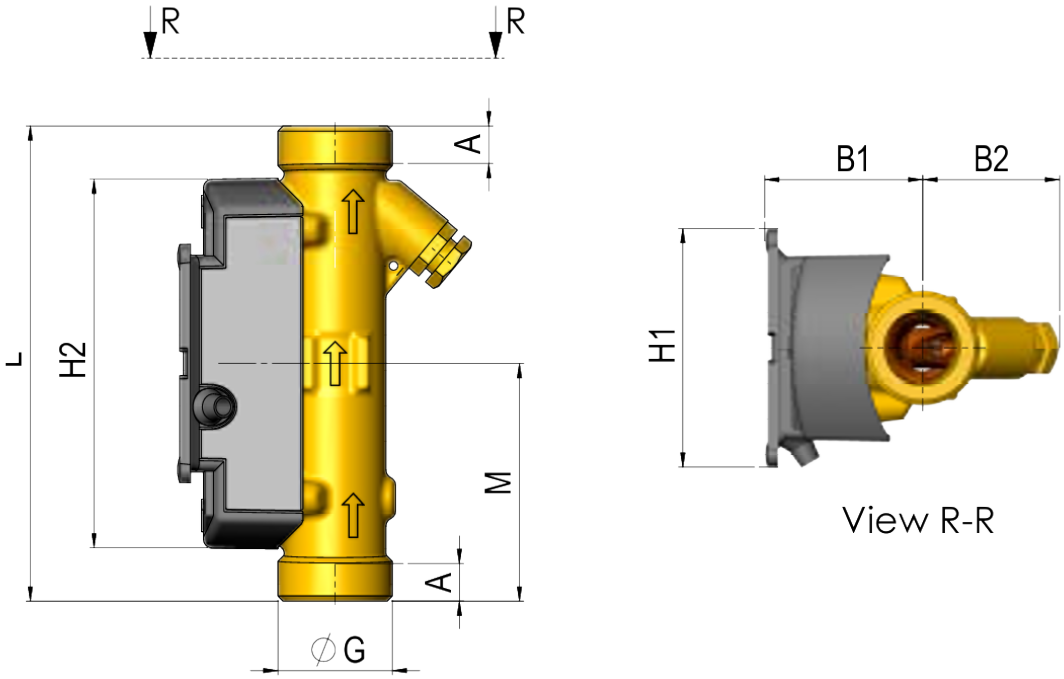

ULTRAFLOW® 54, G¾B and G1B									
Nominal flow rate	**q_p**	**m³/h**	**0,6**	**0,6**	**1,5**	**1,5**	**1,5**	**2,5**	**2,5**
Thread	**G**	**Inch**	**G¾B**	**G1B**	**G¾B**	**G1B**	**G1B**	**G1B**	**G1B**
Total length	L	mm	110	130	110	130	190	130	190
Dimension	M	mm	L/2	L/2	L/2	L/2	L/2	L/2	L/2
Dimension	H2	mm	86	86	86	86	86	86	86
Dimension	A	mm	8	12	12	12	8	12	12
Dimension	B1	mm	37	37	37	40	37	37	40
Dimension	B2	mm	32	32	32	35	32	32	35
Dimension	H1	mm	55	55	55	55	55	55	55
Weight		app. kg	0.41	0.46	0.51	0.53	0.51	0.61	0.67

Generated: 23.11.2026 11:59 | All rights reserved

ULTRAFLOW® 54, G1¼B, G1½B and G2B

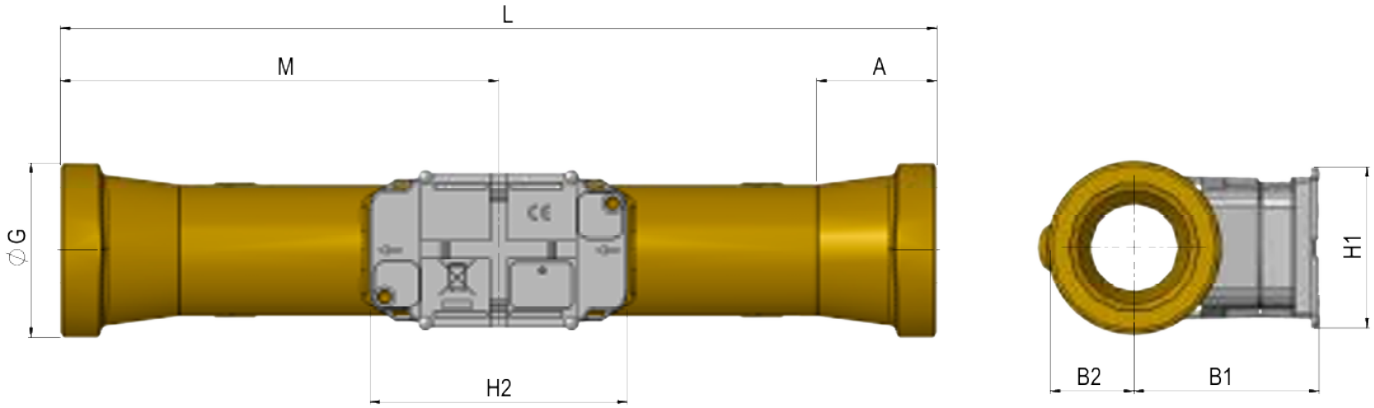

ULTRAFLOW® 54, G1¼B, G1½B and G2B						
Nominal flow rate	**q_p**	**m^3/h**	**3,5**	**6**	**6**	**10**
Thread	**G**	**Inch**	**G1¼B**	**G1¼B**	**G1½B**	**G2B**
Total length	L	mm	260	260	260	300
Dimension	M	mm	L/2	L/2	L/2	L/2
Dimension	H2	mm	89	89	89	89
Dimension	A	mm	16	16	31	40.2
Dimension	B1	mm	58	60	60	63
Dimension	B2	mm	20	20	24	29
Dimension	H1	mm	55	55	55	55
Weight		app. kg	1.5	1.6	1.7	2.5

Generated: 23.11.2026 11:59 | All rights reserved

ULTRAFLOW® 54, DN20 to DN50

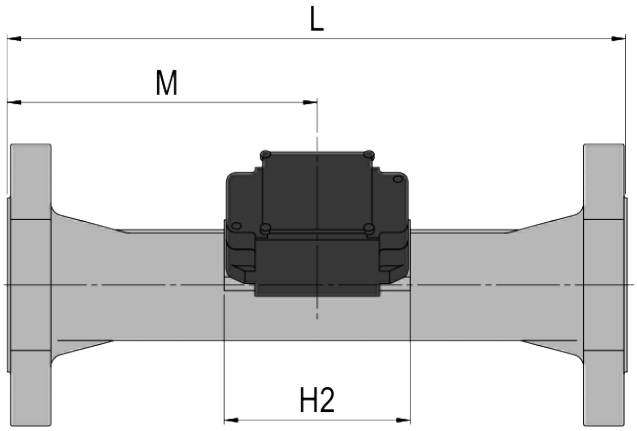

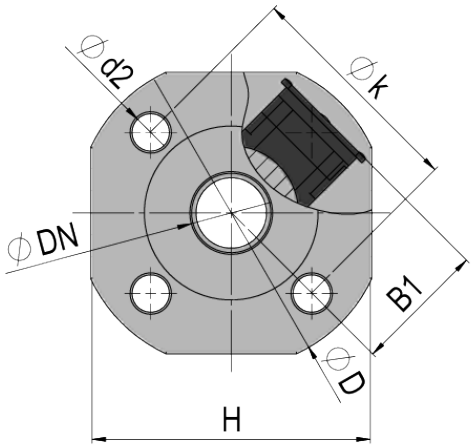

Flange facing type B, raised face according to EN 1092-1										
Nominal flow rate	**q_p**	**m^3/h**	**1,5**	**2,5**	**3,5**	**6**	**6**	**10**	**15**	**15**
Diameter	**DN**	**mm**	**20**	**20**	**25**	**25**	**32**	**40**	**50**	**50**
Total length	L	mm	190	190	260	260	260	300	250	270
Total height	H	mm	95	95	106	106	128	136	145	145
Dimension	M	mm	L/2	L/2	L/2	L/2	L/2	L/2	155	155
Dimension	H2	mm	89	89	89	89	89	89	89	89
Dimension	B1	mm	58	58	58	58	D/2	D/2	D/2	D/2
Dimension	D	mm	105	105	115	115	140	150	165	165
Dimension	k	mm	75	75	85	85	100	110	125	125
Bolts	d2	mm	14	14	14	14	18	18	18	18
Bolts Thread			M12	M12	M12	M12	M16	M16	M16	M16
Weight		app. kg	3.2	2.9	5.0	5.0	5.2	8.3	9.8	10.1

ULTRAFLOW® 54, DN65 to DN125

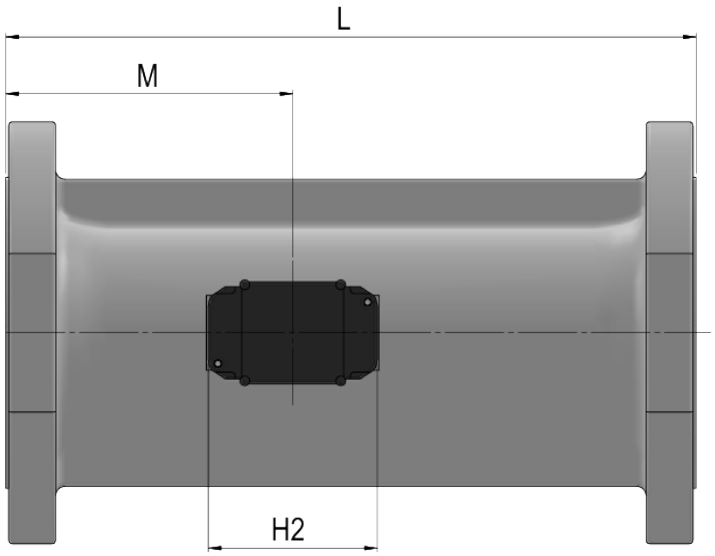

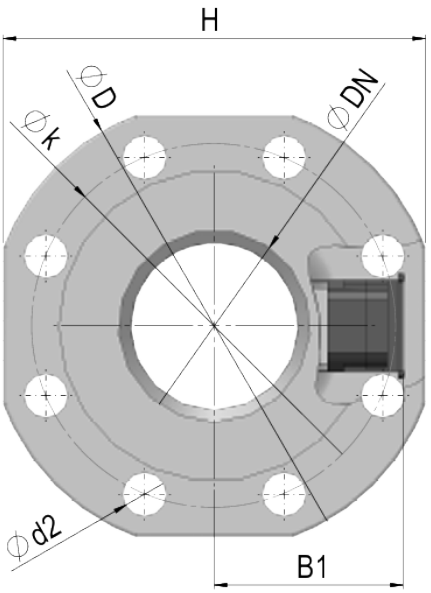

Flange facing type B, raised face according to EN 1092-1							
Nominal flow rate	**q_p**	**m^3/h**	**25**	**40**	**60**	**100**	**100**
Diameter	**DN**	**mm**	**65**	**80**	**100**	**100**	**125**
Total length	L	mm	300	300	360	360	350
Total height	H	mm	168	184	220	220	260
Dimension	M	mm	170	170	210	210	212
Dimension	H2	mm	89	89	89	89	89
Dimension	B1	mm	H/2	H/2	H/2	H/2	H/2
Dimension	D	mm	185	200	220	220	270
Dimension	k	mm	145	160	190	190	220
Bolts	d2	mm	18	18	22	22	26
Bolts thread			M16	M16	M20	M20	M24
Weight		app. kg	13.2	16.8	21.7	21.7	28.2

Calculator MULTICAL©
installed on ULTRAFLOW©54

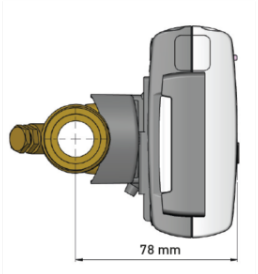

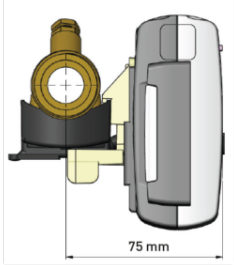

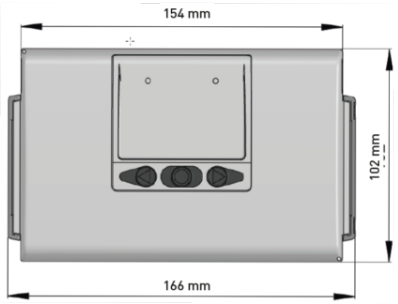



Generated: 23.11.2026 11:59 | All rights reserved

Installation note

Straight inlet

ULTRAFLOW® requires neither straight inlet nor outlet to meet the Measuring Instruments Directive MID 2014/32/EU, OIML R75:2002 and EN 1434. Only in case of heavy flow disturbances before the meter, a straight inlet section will be necessary. It is recommended to follow the guidelines in CEN CR 13582.

Operating pressure

To minimise the risk of measuring errors as a result of cavitation or air in the water, it is recommended to keep a sufficient static pressure at the flow sensor outlet of min. 1,5 bar (1,0 bar for qp 1,5 - 2,5) up to qp and min. 2,5 bar (2,0 bar for qp 1,5 - 2,5) at qs. This applies to temperatures up to app. 80 °C. It is particularly recommended to follow this advice during meter testing. In absence of cavitation, the flow sensor is typically functioning at lower operating pressure. Furthermore, ULTRAFLOW® must not be exposed to lower pressure than the ambient pressure (vacuum). This minimises the risk of transducer damage.

Minimum recommended distances (best practice)	
Inlet section	5 x DN
Outlet section	3 x DN

Generated: 23.11.2026 11:59 | All rights reserved

Installation positions

Pipe:	horizontal	
	vertical	
	inclined	
Head of the meter	to the side	
ULTRAFLOW® 54 DN 15 – DN 125:	± 45°	





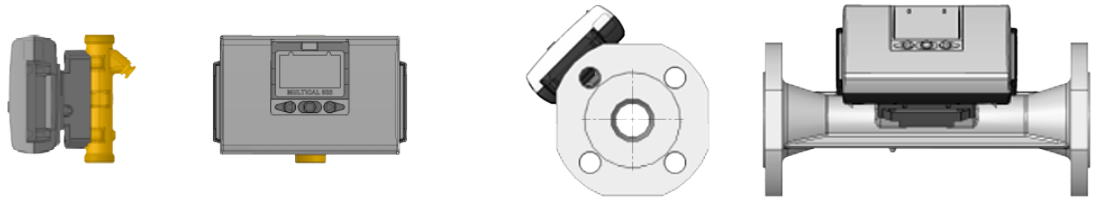

At a medium temperature above 90 °C, calculator and Pulse Transmitter must not be mounted on the flow sensor. Instead wall mounting is recommended.

Generated: 23.11.2026 11:59 | All rights reserved

Coupling and direct short sensor mounted in ULTRAFLOW® 54

A temperature sensor can be directly mounted (M10x1 connection) in the outlet of all flow sensors with threaded meter housings (qp 0.6...10 m³/h).

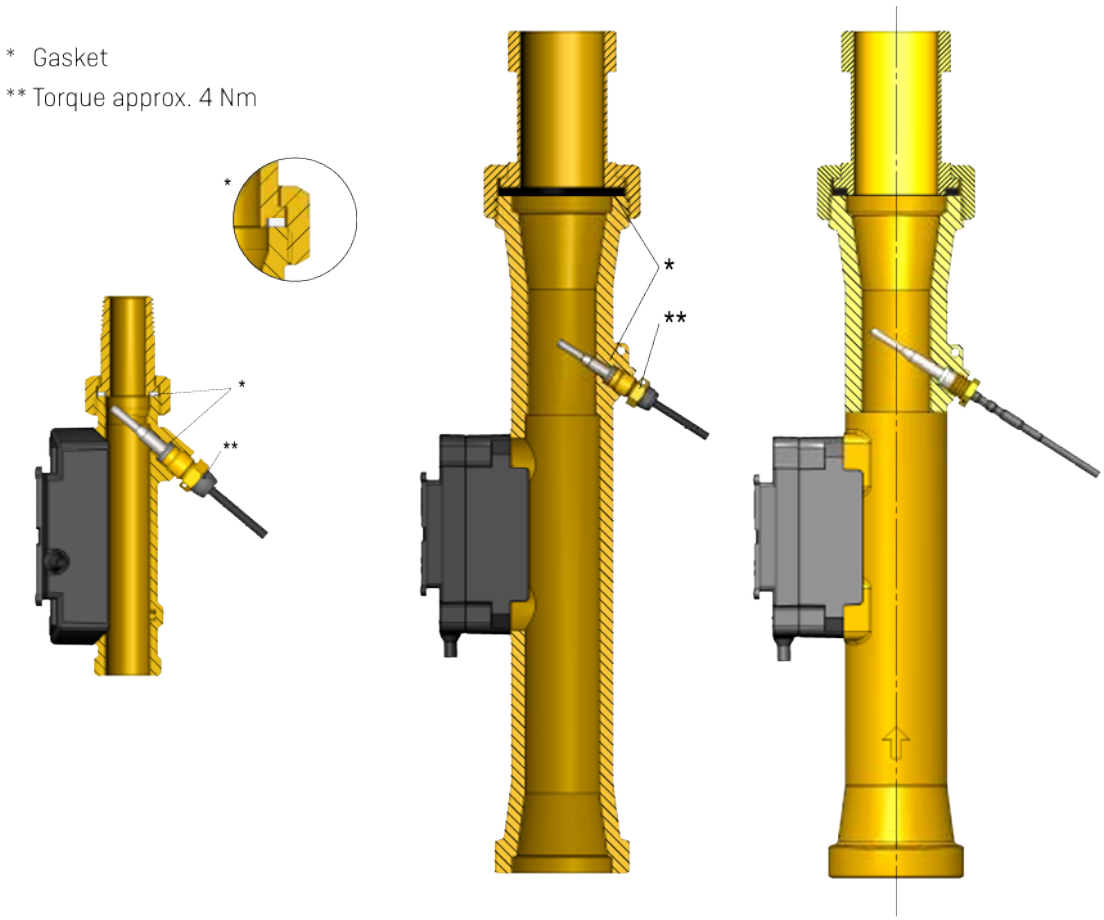

Electrical connections

ULTRAFLOW® 54	→	MULTICAL®
Blue (Masse) / 11 A	→	11
Red (Supply) / 9 A	→	9
Yellow (Signal) / 10 A	→	10

Generated: 23.11.2026 11:59 | All rights reserved