Water Wastewater



Q-Eye Radar

For open channels and partially filled pipes

Your benefits

- Non-contact measurement of flow and level: **No contact with fluid during installation, no sensor fouling or need for regular cleaning**
- Easy mounting during continuous process: **Minimize installation costs and duration**
- Platform-independent web interface for configuration, operation and maintenance: **Easy and fast setup with multi-language graphical user interface. Parametrization with any mobile device, no software needed**
- Integrated Wi-Fi access point and LAN interface, optional mobile connection: **Efficient system integration, real-time remote access anytime and anywhere**
- Adaptable to surcharge conditions: **Combine radar measurement with submersible pressure transducer**

Applications

- Open channels or partially filled pipes
- Ideal for harsh environments and heavily polluted water
- Continuous flow monitoring in:
  - Wastewater treatment plants
  - Wastewater collection systems
  - Storm water runoff monitoring
  - Urban drainage
  - Industry
  - Hydrological applications

Properties

- Compact aluminum housing, IP66
- Radar-based velocity sensor
- Ultrasonic, radar-based or hydrostatic level sensor
- Non-contact flow and level measurement
- Measurement of low velocities down to 0,02 m/s
- Bi-directional measurement over the entire flow range
- Uncertainty velocity:
  - RV11: ± 0,5 % of reading ± 0,01 m/s
  - RV24: ± 1 % of reading
- Uncertainty flow: Typically <5 % of reading
- Integrated Wi-Fi access point
- Graphical user interface in multiple languages
- All units for display and data storage can be customized by the user
- Preselection of typical cross sections or user-definable irregular shapes
- Analog inputs for external sensors (2-wire loop-powered)
- Multiple analog and digital outputs, user programmable
- Communication: Ethernet, Modbus RTU/TCP, opt. 4G/3G/2G modem
- Power supply: 100 - 240 V AC or 9 - 36 V DC

Options

- Two radar velocity sensors suited for wastewater or hydrological applications
- Choice of ultrasonic, radar-based or hydrostatic level sensors
- Additional pressure transducer for surcharge conditions

GWF AG
Obergrundstrasse 119
6005 Lucerne, Switzerland

T +41 41 319 50 50
info@gwf.ch, www.gwf.ch

Technical support:
T +41 41 319 52 00, support@gwf.ch

Last updated: 29.04.2026
Generated: 25.11.2026 15:26 | All rights reserved

Product description

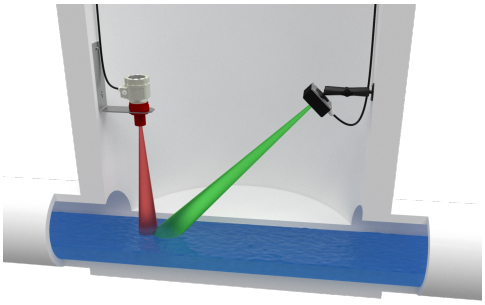

Q-Eye Radar with radar and level sensor

The Q-Eye Radar flow meter is designed for stationary flow monitoring of slightly to heavily polluted media in open channels or partially filled pipes. Q-Eye Radar is an exceptionally versatile flow measurement system designed for continuous operation and suitable for application in wastewater and storm water sewers as well as open channels and rivers. Compact construction combined with the non-contact measurement principle enables an easy installation and use. Additionally, the Q-Eye Radar measures bi-directional flow over the entire measurement range and near zero flow velocities down to 0,02 m/s.

WebUI (Wi-Fi)

The Q-Eye Radar is equipped with an integrated web server running a WebUI. You can display and manage the WebUI using the standard web browser of your smartphone, tablet PC or notebook. There is no need for any additional software or App. Parameter setting and data visualization has never been so easy.



Data storage and transmission

Combine the Q-Eye Radar with a 4G/3G/2G cellular modem for automatic data transmission. The logged data can be sent to any host computer (FTP server) or to the GWF web-based cloud solution at a user-selectable interval (e.g. 4 times a day, once a day or once a week). Alternatively, WLAN and Ethernet connections are available.

Information on level, velocity, flow and signal strength can be taken at regular intervals between 1 min and 60 min. The Q-Eye Radar is equipped with internal storage capacity (16 GB) and will store data for up to 12 months.

Measuring principle

For strongly polluted media or challenging installation sites, a non-contact measurement is often the method of choice. As the Q-Eye Radar system can be mounted outside of the medium, your personnel will not get in contact with the polluted fluid during installation. Furthermore, the need for maintenance caused by sensor fouling or deposits is eliminated.

By combining both a radar velocity and a water level sensor, the Q-Eye Radar provides a revolutionary approach to open channel and wastewater flow monitoring.

The velocity sensor sends a radar signal at an angle of app. 55° to the surface of the water. The signal is then reflected back to the sensor. The local flow velocity can be measured based on the Doppler shift of frequency between the initially emitted and the reflected signal.

The level sensor is used to measure the height of the water at the exact point where the surface velocity was determined. Q-Eye Radar calculates the area and total discharge based on the user-definable channel profile.

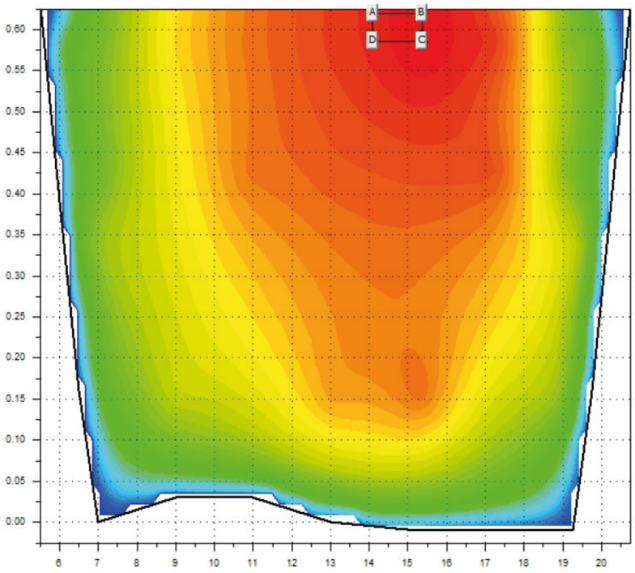

Generated: 25.11.2026 15:26 | All rights reserved

Component description

The Q-Eye Radar system is composed of a wall-mounted transmitter, a radar velocity sensor and any level sensor (ultrasonic, radar or pressure). For surcharge conditions, submersible level sensors are available.

Transmitter



Wall-mounted transmitter

The Q-Eye Radar transmitter incorporates all the required algorithms and software to ensure measurement accuracy and repeatability. The IP66 (NEMA 4X) compact housing features a 4 x 20 alphanumeric LCD display and a 4 button keypad.

All configuration data as well as measured and calculated data are stored inside a 16 GB Micro-SD card. The transmitter controls the measurements, calculates the flow rate and provides freely programmable current outputs, status alarms, frequency outputs and totalizer readings.

The Q-Eye Radar is designed to accept any depth sensor (ultrasonic, radar and pressure) with an analog input (4 - 20 mA). Our Q-Eye Radar transmitter offers the best in wastewater measurement.

Velocity and level sensors



Radar velocity sensor R11 and R24



Radar or ultrasonic level sensor

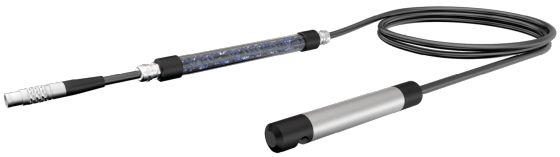

Pressure level sensor

The radar velocity sensors are operating at the free 24 GHz band frequency and make use of the Doppler effect to gain information about the speed of the moving surface. The sensor does this by beaming a microwave signal to the flow surface at a defined angle and analyzing the signal reflection from particles and disturbances moving with the flow. The frequency of this returning signal has been shifted by an amount directly proportional to the spot velocity.

The ultrasonic level sensor operates by energizing a piezoelectric transducer with an electronic pulse. This pulse creates a pressure wave that travels to the flow surface and is partially reflected back to the transducer. The signal time of flight to the flow surface and back is recorded. The actual distance is calculated knowing the speed of sound at the site, which is corrected by an embedded temperature sensor.

Alternatively, the system can be equipped with an additional radar water level sensor, which is independent of ambient air temperature.

For some applications, flow conditions change from open channel flow to surcharged conditions (e.g. in sewers). Down-looking level sensors cannot provide information when submerged. Consequently, Q-Eye Radar can be equipped with an optional depth sensor (pressure transducer) which provides continuous measurement in surcharge events.

Generated: 25.11.2026 15:26 | All rights reserved

Technical Data

Transmitter

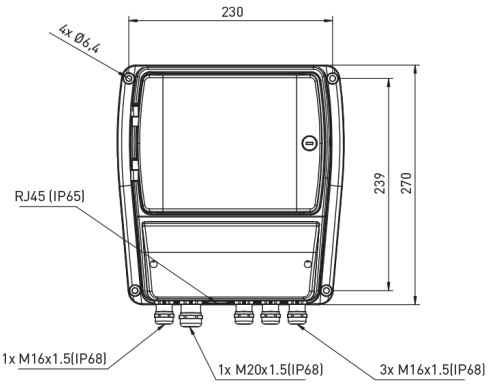

	Q-Eye Radar
Display	4 lines, 20 characters
Keyboard	4 keys
Datalogger	16 GB Micro SD card
Communication	RS485, Modbus (RS232 or RS485), WLAN, 4G (LTE) / 3G (HSPA+) / 2G, Ethernet 10/100 Mbps
Inputs	max. 4 x 4 - 20 mA, 2 x digital
Outputs	max. 4 x 4 - 20 mA, 4 x relay, 2 x digital
Power supply	9 - 36 V DC or 100 - 240 V AC (50/60 Hz)
Ingress protection	IP66 (NEMA 4)
Enclosure	Aluminum
Ambient temperature	-15 to + 60 °C
Storage temperature	-20 to + 70 °C
Dimensions	270 x 256 x 139 mm (L x W x H)

Radar velocity sensor

	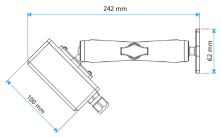 **RV11**	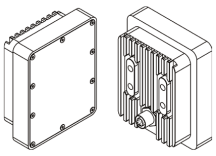 **RV24**
Preferred application	Wastewater	Hydrology
Frequency	24 GHz	24 GHz (K-band)
Beam width	11° (-3 dB)	12° Azimuth, 24° Elevation
Range	± 0,05 m/s to ± 15 m/s	± 0,02 m/s to ± 15 m/s
Resolution	1 mm/s (min. wave height 3 mm)	1 mm/s (min. wave height 1 mm)
Uncertainty velocity	± 0,5 % of reading ± 0,01 m/s	± 1 % of reading
Uncertainty flow	typically <5 % of reading, depending on site conditions	typically <3% of reading, after calibration
Measurement interval	continuous (every second)	continuous (every second)
Min. distance to surface	0,2 m	0,5 m
Max. distance to surface	10 m	50 m (radar beam to water) 20 m (height above the water)
Integrated angle compensation	-	from 30° to 70°
Ingress protection	IP68 (48 h at 50 kPa, NEMA 6P)	IP68
Ambient temperature	-40 to + 85 °C	-40 to + 85 °C
Dimensions	242 (L mounting), 100 x 100 mm (W x H sensor)	110 x 90 x 50 mm

Q-Eye Radar is available with a variety of ultrasonic and radar down-looking level sensors as well as a submersible pressure level sensor. Please consult the separate brochure for further details.

Generated: 25.11.2026 15:26 | All rights reserved